DDMP

With integrated efficiency advantage

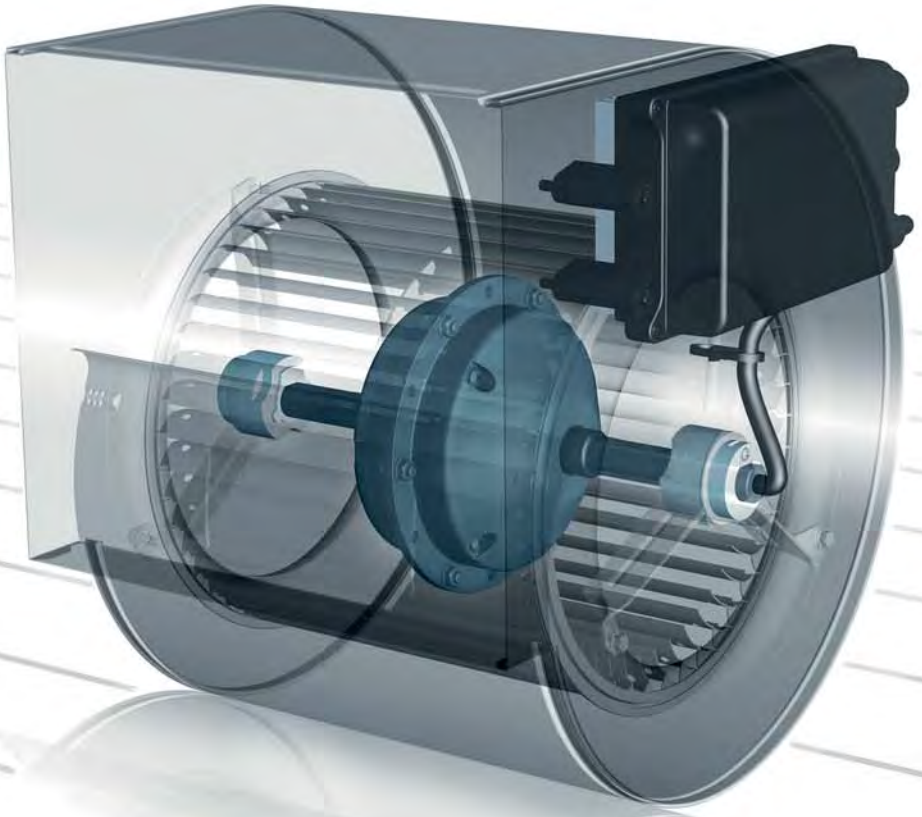

NICOTRA|Gebhardt

fan|tastic solutions

Time is money - with the new DDMP you save year after year

Fit for the future with EC-technology

In terms of energy efficiency Nicotra Gebhardt customers are ahead of the times. Our new direct driven centrifugal fan DDMP already exceeds the strict limits of the ErP Directive for 2015.

The new DDMP is now available with the particularly energy efficient compact EC-motor. These innovative motors achieve the highest efficiency and therefore cost less to operate than traditional AC motors in every application.

The EU's ErP Directive prescribes minimum levels of efficiency for electric motors. These levels of efficiency will be steadily increased in the coming years.

With the development of the new DDMP combined with the highly-efficiency EC-motor we already exceed the requirements that will become compulsory in 2015 and 2017.

Comparison of the different levels efficiency

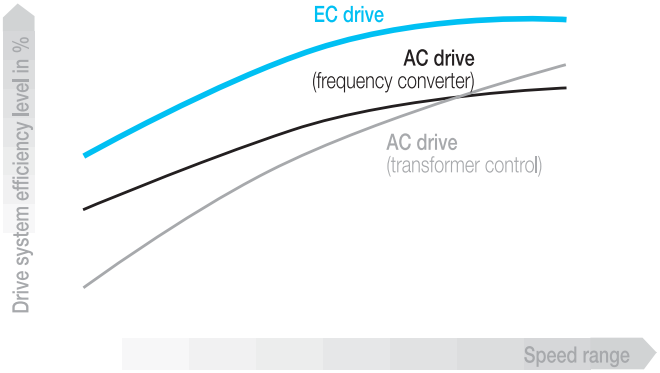

The EC-motor operates without slip losses and thus consumes significantly less power than conventional AC motors.

Important:
This applies for all speeds, i.e. even in partial-load operation!
The EC-motor therefore uses less power than the AC motor under all operating conditions and has a significantly higher level of drive system (motor and control) efficiency

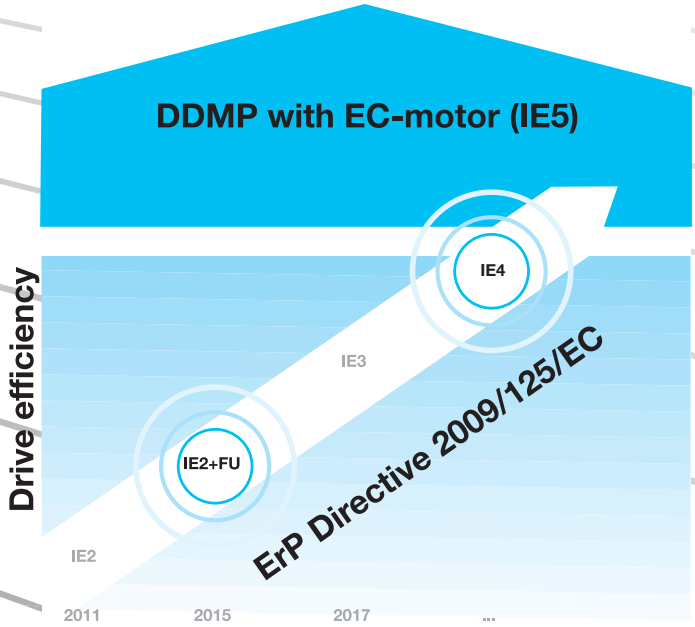

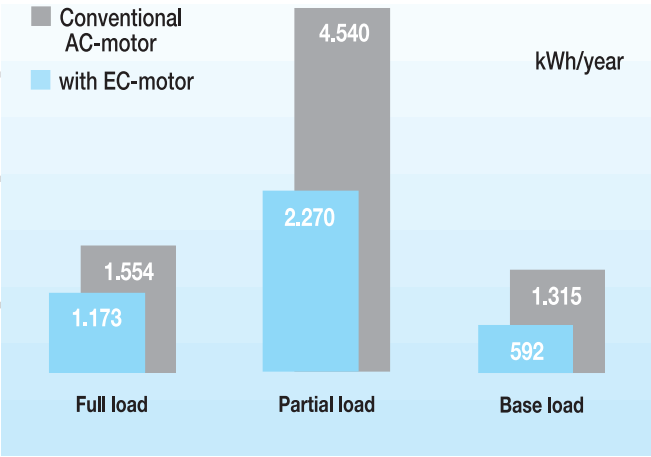

Up to 50 % of the power consumption of a fan can be saved (depending on the operating environment) by the use of EC-motors in place of AC-motors.

Less €
per m³/h air flow

For a brighter future - the new DDMP

The fundamental challenge for the development of the centrifugal fan DDMP is: how to drive fans with the lowest possible power consumption and the highest possible performance?

We would not be Nicotra Gebhardt if we had not long since discovered a solution for this challenge: the “magic word” is EC-technology, which at the same time brings many other advantages:

- significantly lower environmental impact.
- high marked drop in power consumption.
- an enormous reduction in operating costs.
- EMC-C1 compatibility both on radiated and conducted emissions (CEI-EN-61800-3).

High efficiency EC-motor and control unit

Energy saving concept

- new high efficiency EC-motor.
- new compact and streamlined motor design.
- high intensity neodymium magnets.
- no obstruction of intake due to build-on control unit - less aerodynamic losses.

General features

- sensorless control.
- simple installation due to plug and play.
- IP 54 for complete drive.
- designed for double inlet fans.

Interface

- analogue interface for speed control.
- full MODBUS interface compliancy.

High efficiency direct driven centrifugal fan

- integrated solution.
- top rating efficiency.
- plug and play operation.
- no configuration needed.
- low sound level.
- high reliability.

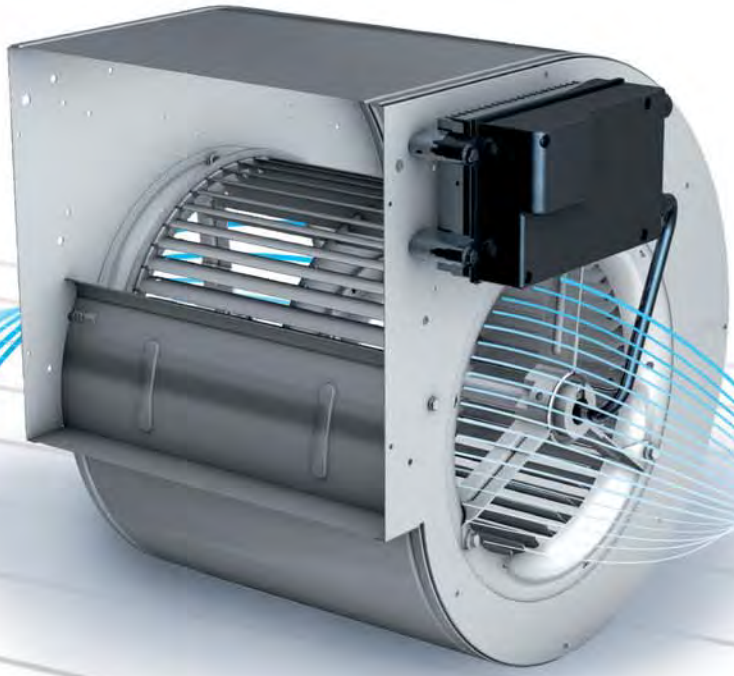

Index

Code	Description	Size	Motor	Phase	Voltage	Cl.	Fan IP	Control type	Hz
6M04L0	DDMP 133/126 7725M3 + DRIVER + FL	133/126	7725M3	1	230	B	20	Driver	50/60
6M04L1	DDMP 133/190 7725M4 + DRIVER + FL	133/126	7725M4	1	230	B	20	Driver	50/60
6M04L2	DDMP 146/190 F 7725M5 + DRIVER + FL	146/190	7725M5	1	230	B	20	Driver	50/60
6M04L3	DDMP 146/190 S 7725M5 + DRIVER + FL	146/190	7725M5	1	230	B	20	Driver	50/60
6M04A0	DDMP 7/7 1416A0 + DRIVER	7/7	1416A0	1	230	F	44	Driver	50/60
6M04E0	DDMP 7/7 1416A0 + DRIVER + FL	7/7	1416A0	1	230	F	44	Driver	50/60
6M04A8	DDMP 7/7 TIG 1416A3 + DRIVER	7/7 TIG	1416A3	1	230	F	44	Driver	50/60
6M04X1	DDMP 7/7 TIG 1416A3 + DRIVER + FL	7/7 TIG	1416A3	1	230	F	44	Driver	50/60
6M04C7	DDMP 7/9 1416A1 + DRIVER	7/9	1416A1	1	230	F	44	Driver	50/60
6M04F7	DDMP 7/9 1416A1 + DRIVER + FL	7/9	1416A1	1	230	F	44	Driver	50/60
6M04A5	DDMP 8/7 TIG 1416A0 + DRIVER	8/7 TIG	1416A0	1	230	F	44	Driver	50/60
6M04E5	DDMP 8/7 TIG 1416A0 + DRIVER + FL	8/7 TIG	1416A0	1	230	F	44	Driver	50/60
6M04A6	DDMP 8/9 TIG 1416A1 + DRIVER	8/9 TIG	1416A1	1	230	F	44	Driver	50/60
6M04E6	DDMP 8/9 TIG 1416A1 + DRIVER + FL	8/9 TIG	1416A1	1	230	F	44	Driver	50/60
6M04A1	DDMP 9/7 1416A0 + DRIVER	9/7	1416A0	1	230	F	44	Driver	50/60
6M04E1	DDMP 9/7 1416A0 + DRIVER + FL	9/7	1416A0	1	230	F	44	Driver	50/60
6M04A9	DDMP 225/240 1416A1 + DRIVER	225/240	1416A1	1	230	F	44	Driver	50/60
6M04E9	DDMP 225/240 1416A1 + DRIVER + FL	225/240	1416A1	1	230	F	44	Driver	50/60
6M04A2	DDMP 9/9 1416A1 + DRIVER	9/9	1416A1	1	230	F	44	Driver	50/60
6M04E2	DDMP 9/9 1416A1 + DRIVER + FL	9/9	1416A1	1	230	F	44	Driver	50/60
6M04A3	DDMP 10/8 1416A2 + DRIVER	10/8	1416A2	1	230	F	44	Driver	50/60
6M04E3	DDMP 10/8 1416A2 + DRIVER + FL	10/8	1416A2	1	230	F	44	Driver	50/60
6M04A4	DDMP 10/10 1416A2 + DRIVER	10/10	1416A2	1	230	F	44	Driver	50/60
6M04E4	DDMP 10/10 1416A2 + DRIVER + FL	10/10	1416A2	1	230	F	44	Driver	50/60
6M04H0	DDMP 9/9 1416A4 + DRIVER	9/9	1416A4	1	230	F	44	Driver	50/60
6M04K0	DDMP 9/9 1416A4 + DRIVER + FL	9/9	1416A4	1	230	F	44	Driver	50/60
6M04H1	DDMP 10/8 1416A4 + DRIVER	10/8	1416A4	1	230	F	44	Driver	50/60
6M04K1	DDMP 10/8 1416A4 + DRIVER + FL	10/8	1416A4	1	230	F	44	Driver	50/60
6M04H2	DDMP 10/10 1416A4 + DRIVER	10/10	1416A4	1	230	F	44	Driver	50/60
6M04K2	DDMP 10/10 1416A4 + DRIVER + FL	10/10	1416A4	1	230	F	44	Driver	50/60
6M04H3	DDMP 12/9 1416A4 + DRIVER	12/9	1416A4	1	230	F	44	Driver	50/60
6M04K3	DDMP 12/9 1416A4 + DRIVER + FL	12/9	1416A4	1	230	F	44	Driver	50/60
6M04H4	DDMP 12/12 1416A4 + DRIVER	12/12	1416A4	1	230	F	44	Driver	50/60
6M04K4	DDMP 12/12 1416A4 + DRIVER + FL	12/12	1416A4	1	230	F	44	Driver	50/60

Index

Current	Watt	m³/h	Pt (Pa)	Total Eff.	N Eff.	Inst. Type	Specific ratio	T min.	T max.	Description	Page
	AT OPTIMUM ENERGY EFFICIENCY POINT										
1.26	140	590	355	49.9	61.2	B	1	-20°C	+40°C	DDMP 133/126 7725M3 + DRIVER + FL	6
1.39	150	680	320	47.1	58.7	B	1	-20°C	+40°C	DDMP 133/190 7725M4 + DRIVER + FL	7
1.25	130	705	275	47.3	59.2	B	1	-20°C	+40°C	DDMP 146/190 F 7725M5 + DRIVER + FL	8
1.33	140	780	275	50.6	62.4	B	1	-20°C	+40°C	DDMP 146/190 S 7725M5 + DRIVER + FL	9
4.6	580	1640	620	53.5	61.3	B	1	-20°C	+40°C	DDMP 7/7 1416A0 + DRIVER	10
4.6	580	1640	620	53.5	61.3	B	1	-20°C	+40°C	DDMP 7/7 1416A0 + DRIVER + FL	
4.59	960	1480	1060	49.1	55.5	B	1	-20°C	+40°C	DDMP 7/7 TIG 1416A3 + DRIVER	11
4.59	960	1480	1060	49.1	55.5	B	1	-20°C	+40°C	DDMP 7/7 TIG 1416A3 + DRIVER + FL	
4.47	853	2460	853	51.4	58.2	B	1	-20°C	+40°C	DDMP 7/9 1416A1 + DRIVER	12
4.47	853	2460	853	51.4	58.2	B	1	-20°C	+40°C	DDMP 7/9 1416A1 + DRIVER + FL	
4.6	830	1800	805	53	59.8	B	1	-20°C	+40°C	DDMP 8/7 TIG 1416A0 + DRIVER	13
4.6	830	1800	805	53	59.8	B	1	-20°C	+40°C	DDMP 8/7 TIG 1416A0 + DRIVER + FL	
4.6	1050	2605	685	51.5	57.7	B	1	-20°C	+40°C	DDMP 8/9 TIG 1416A1 + DRIVER	14
4.6	1050	2605	685	51.5	57.7	B	1	-20°C	+40°C	DDMP 8/9 TIG 1416A1 + DRIVER + FL	
4.6	815	1806	825	55.8	62.7	B	1	-20°C	+40°C	DDMP 9/7 1416A0 + DRIVER	15
4.6	815	1806	825	55.8	62.7	B	1	-20°C	+40°C	DDMP 9/7 1416A0 + DRIVER + FL	
4.48	1045	2355	750	51.2	57.4	B	1	-20°C	+40°C	DDMP 225/240 1416A1 + DRIVER	16
4.48	1045	2355	750	51.2	57.4	B	1	-20°C	+40°C	DDMP 225/240 1416A1 + DRIVER + FL	
4.6	950	2800	625	55.9	62.4	B	1	-20°C	+40°C	DDMP 9/9 1416A1 + DRIVER	17
4.6	950	2800	625	55.9	62.4	B	1	-20°C	+40°C	DDMP 9/9 1416A1 + DRIVER + FL	
4.6	1030	2980	675	58.9	65.1	B	1	-20°C	+40°C	DDMP 10/8 1416A2 + DRIVER	18
4.6	1030	2980	675	58.9	65.1	B	1	-20°C	+40°C	DDMP 10/8 1416A2 + DRIVER + FL	
4.6	1030	3380	605	59.8	66.1	B	1	-20°C	+40°C	DDMP 10/10 1416A2 + DRIVER	19
4.6	1030	3380	605	59.8	66.1	B	1	-20°C	+40°C	DDMP 10/10 1416A2 + DRIVER + FL	
9.52	1430	3215	875	59	64.4	B	1	-20°C	+40°C	DDMP 9/9 1416A4 + DRIVER	20
9.52	1430	3215	875	59	64.4	B	1	-20°C	+40°C	DDMP 9/9 1416A4 + DRIVER + FL	
9.42	2210	3740	1190	59.5	63.6	B	1	-20°C	+40°C	DDMP 10/8 1416A4 + DRIVER	21
9.42	2210	3740	1190	59.5	63.6	B	1	-20°C	+40°C	DDMP 10/8 1416A4 + DRIVER + FL	
9.53	2165	4400	1020	61.2	65.4	B	1	-20°C	+40°C	DDMP 10/10 1416A4 + DRIVER	22
9.53	2165	4400	1020	61.2	65.4	B	1	-20°C	+40°C	DDMP 10/10 1416A4 + DRIVER + FL	
7.29	1585	4235	755	60.1	65.1	B	1	-20°C	+40°C	DDMP 12/9 1416A4 + DRIVER	23
7.29	1585	4235	755	60.1	65.1	B	1	-20°C	+40°C	DDMP 12/9 1416A4 + DRIVER + FL	
7.49	1620	4470	690	56.6	61.6	B	1	-20°C	+40°C	DDMP 12/12 1416A4 + DRIVER	24
7.49	1620	4470	690	56.6	61.6	B	1	-20°C	+40°C	DDMP 12/12 1416A4 + DRIVER + FL	

DDMP 133/126

Wmax.abs.:	180	Amp Max:	1.26
Volt:	220/240 1~	Prot.:	IP 20
Hz:	50	T.H.:	NO
Poles:	8	Ins. Cl.:	B

Curves in class 2 according to DIN 24166 q_1=1.15 kg/m³

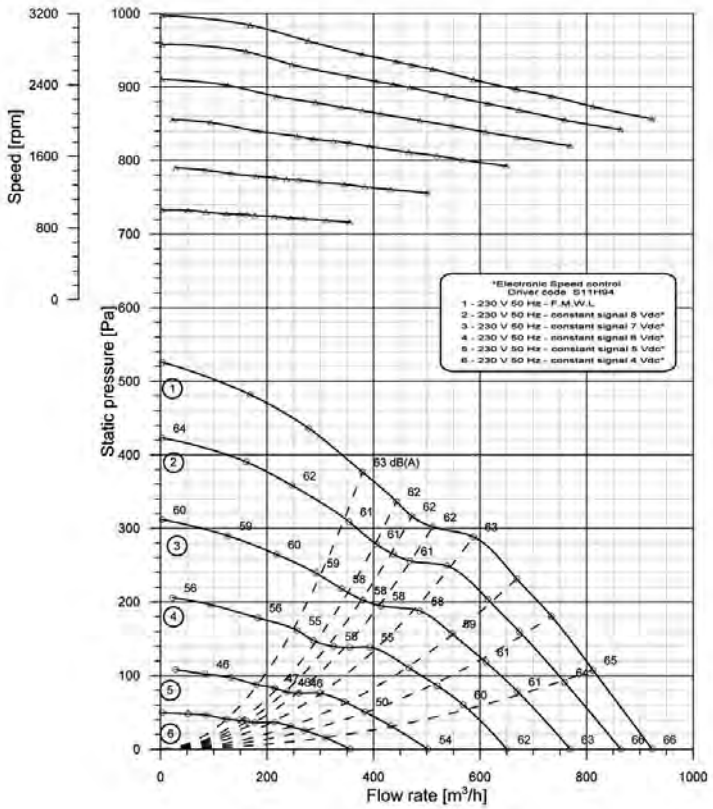

Dimensions in mm, subject to change

fan code 6M04L0

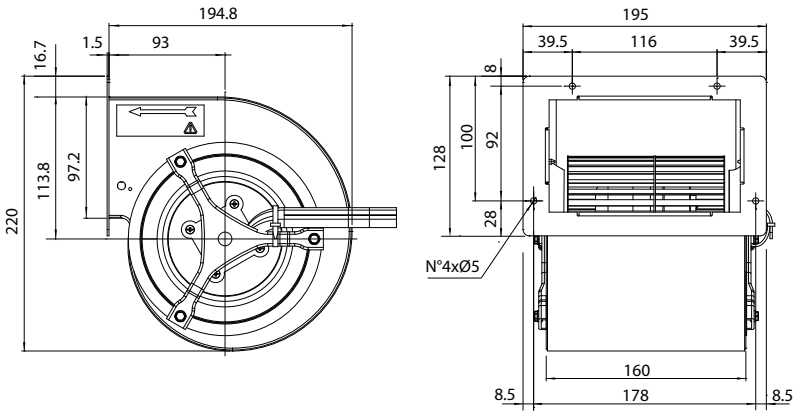

Working point		Sound pressure level for inlet side (Lp) in dB									
	(m³/h)	63	125	250	500	1k	2k	4k	8kHz		LpA
230V / 50Hz	3	56,5	56,4	67,3	63,3	62,5	55,2	53,3	49.7		66.4
10Vdc	169	53,3	52,0	67,0	61,8	61,2	54,2	52,6	49.0		65.3
	278	53,4	50,4	65,5	61,3	60,3	54,0	52,5	48.3		64.6
	379	49,8	46,2	63,1	59,7	58,9	53,5	51,4	47.3		63.1
	443	48,4	50,3	61,9	58,6	58,6	53,4	51,1	47.1		62.5
	472	49,6	48,8	61,2	58,4	58,6	53,5	51,0	47.1		62.4
	511	59,1	48,0	61,1	58,5	58,5	53,6	51,3	47.4		62.4
	588	45,7	43,7	60,1	58,2	58,8	54,2	51,9	48.3		62.6
	669	46,6	44,7	59,9	58,4	59,3	55,0	52,5	49.2		62.8
	734	45,2	45,4	60,2	59,4	60,3	56,6	53,4	50.4		63.1
	812	45,0	51,2	61,6	60,3	61,5	57,0	54,4	51.7		65.1
	923	46,5	53,0	63,8	62,0	62,5	58,3	56,3	53.4		66.5

DDMP 133/190

Wmax.abs.:	201	Amp Max:	1.39
Volt:	220/240 1~	Prot.:	IP 20
Hz:	50	T.H.:	NO
Poles:	8	Ins. Cl.:	B

Curves in class 2 according to DIN 24166 q_1=1.15 kg/m³

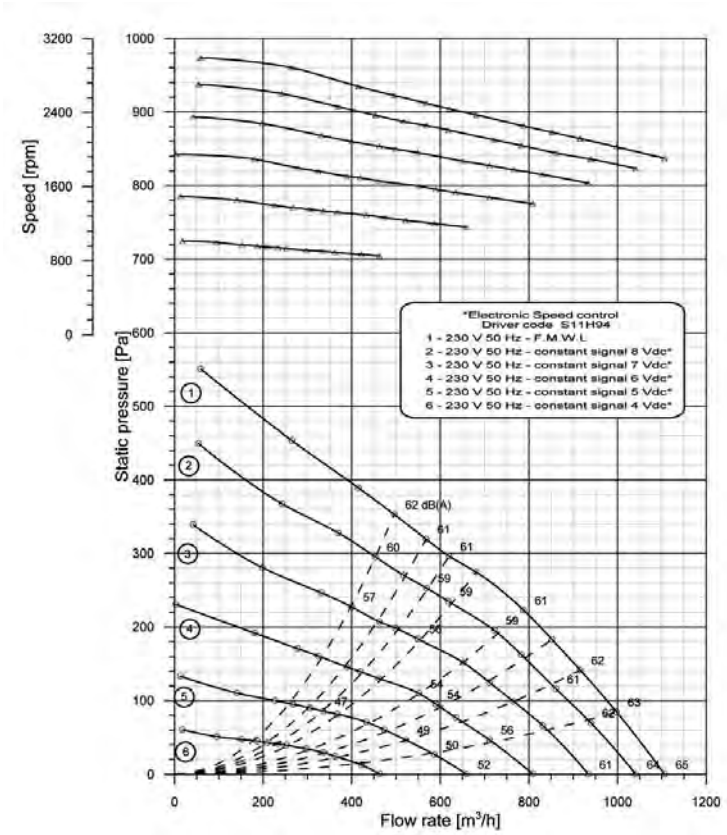

Dimensions in mm, subject to change

fan code 6M04L1

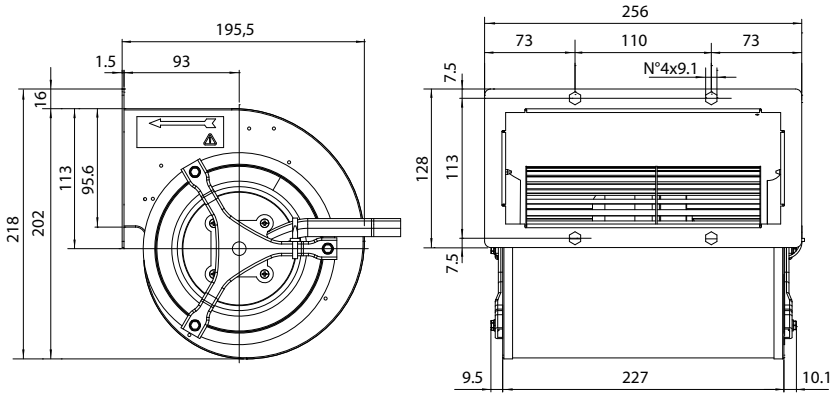

Working point		Sound pressure level for inlet side (Lp) in dB									
	(m³/h)	63	125	250	500	1k	2k	4k	8kHz		LpA
230V / 50Hz	59	67.4	59.2	67.4	64.4	60.9	54.5	51.5	48.1		66.0
10Vdc	265	63.9	53.8	64.8	60.1	57.5	52.4	49.6	45.0		62.7
	415	55.0	49.8	64.6	60.8	57.3	52.2	49.7	45.1		62.8
	496	50.2	48.6	63.8	60.0	56.9	51.6	49.0	44.5		62.1
	568	51.4	46.0	62.3	59.0	56.3	51.1	48.5	43.9		61.3
	620	51.1	47.0	61.2	58.4	55.9	51,8	48.6	44.0		60.8
	681	42.3	48.1	59.8	57.8	55.8	51.5	48.7	44.3		61.1
	788	44.2	48.2	60.1	58.1	57.0	51.2	49.4	45.4		61.1
	852	44.2	50.0	59.8	58.4	57.5	51.6	50.3	46.6		61.8
	916	47.3	50.4	60.1	58.6	58.2	52.3	51.1	47.4		62.0
	998	48.6	51.1	60.6	59.8	59.3	53.4	52.4	48.9		63.1
	1106	53.6	55.4	61.5	61.4	60.9	56.3	55.7	51.0		65.1

DDMP 146/190 FD

Wmax.abs.:	182	Amp Max:	1.25
Volt:	220/240 1~	Prot.:	IP 20
Hz:	50	T.H.:	NO
Poles:	8	Ins. Cl.:	B

Curves in class 2 according to DIN 24166 q_1=1.15 kg/m³

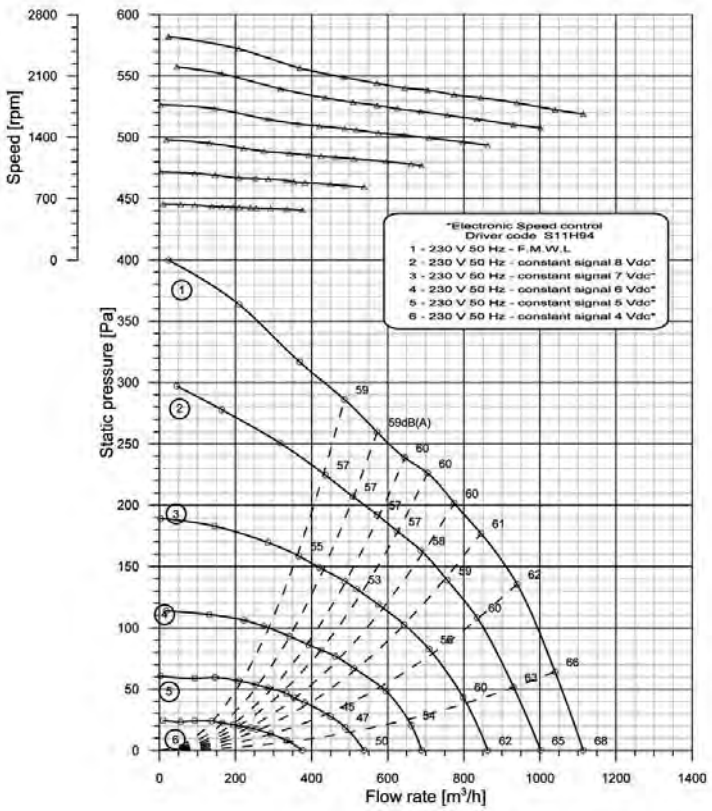

Dimensions in mm, subject to change

fan code 6M04L2

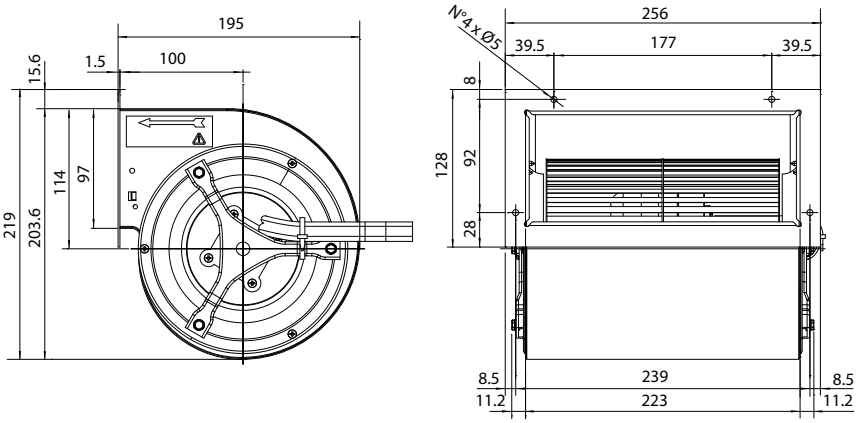

Working point		Sound pressure level for inlet side (Lp) in dB									
	(m³/h)	63	125	250	500	1k	2k	4k	8kHz		LpA
230V / 50Hz	24	63.0	56.9	66.8	61.1	57.0	50.9	48.2	44.9		63.2
10Vdc	209	58.7	53.3	64.8	59.5	55.9	49.7	47.0	43.3		61.7
	369	58.1	56.8	62.0	58.0	54.5	49.2	46.3	42.5		60.0
	486	53.9	50.8	60.4	57.5	54.3	49.5	46.1	42.7		59.5
	572	57.5	45.4	60.0	56.4	54.3	49.6	45.8	43.0		59.1
	645	44.2	46.7	60.0	56.6	54.9	50.5	46.4	43.6		59.5
	705	48.8	43.2	59.1	57.1	55.0	51.1	46.8	44.2		59.7
	775	53.0	44.9	59.7	56.9	55.6	52.5	47.1	45.1		60.2
	845	41.2	47.1	60.3	57.5	56.3	52.5	48.2	46.2		60.8
	940	50.3	47.9	60.6	58.2	57.9	55.1	49.7	47.7		62.3
	1040	57.4	54.1	65.5	62.7	61.5	56.9	53.1	51.2		65.9
	1114	61.2	57.8	68.4	65.0	63.8	58.7	55.0	52.6		68.1

NICOTRA Gebhardt

HVAConline.com.au

DDMP 146/190 SAE

Wmax.abs.:	194	Amp Max:	1.33
Volt:	220/240 1~	Prot.:	IP 20
Hz:	50	T.H.:	NO
Poles:	8	Ins. Cl.:	B

Curves in class 2 according to DIN 24166 q_1=1.15 kg/m³

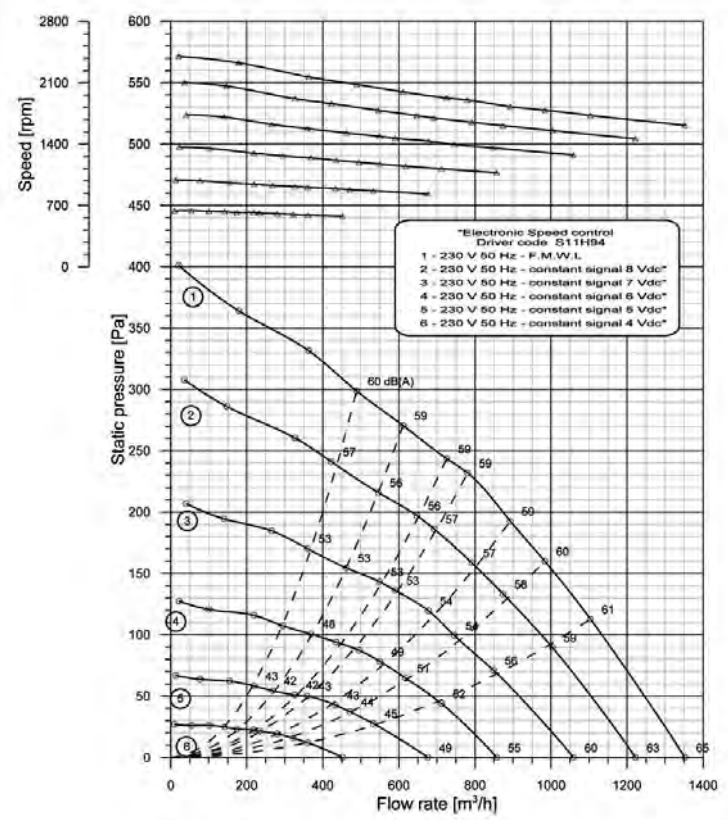

Dimensions in mm, subject to change

fan code 6M04L3

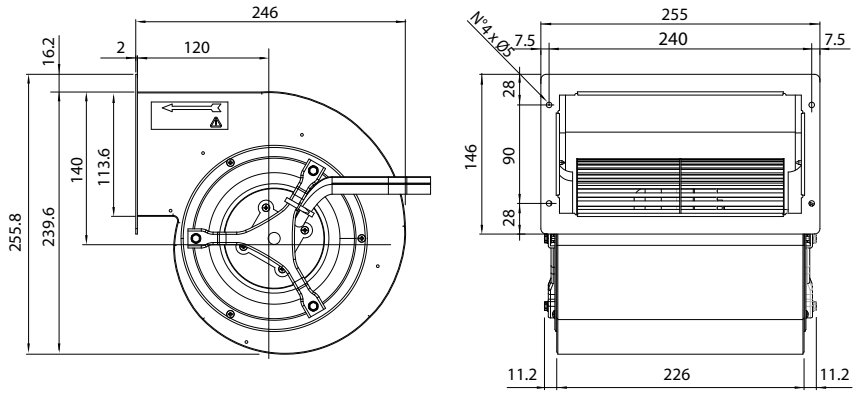

Working point		Sound pressure level for inlet side (Lp) in dB								
	(m³/h)	63	125	250	500	1k	2k	4k	8kHz	A
230V / 50Hz	21	62.4	56.6	66.2	60.1	54.9	51.4	50.0	46.4	62.4
10Vdc	179	63.0	55.5	65.2	57.5	52.9	50.3	48.7	45.1	60.8
	363	66.0	52.8	63.5	56.2	52.5	49.3	47.1	43.5	59.6
	489	59.7	53.2	63.6	57.2	52.3	49.4	47.0	43.0	59.8
	611	54.7	50.8	62.1	56.1	51.7	49.5	46.8	42.9	58.9
	726	51.1	49.7	61.0	55.5	52.1	49.9	47.2	43.4	58.6
	781	52.9	48.0	60.8	55.5	52.4	50.3	47.4	43.7	58.7
	893	49.3	49.1	61.1	56.1	53.3	51.5	48.3	44.8	59.5
	984	50.0	52.0	61.5	56.0	53.6	52.5	49.3	46.0	60.0
	1104	54.5	53.8	61.5	57.2	54.8	54.0	51.4	47.9	61.2
	1352	60.3	61.5	65.1	61.0	57.6	57.2	57.9	52.3	65.2

DDMP 7/7

Wmax.abs.:	1074	Amp Max:	4.62
Volt:	220/240 1~	Prot.:	IP 44
Hz:	50	T.H.:	YES-IN
Poles:	8	Ins. Cl.:	F

Curves in class 2 according to DIN 24166 q_1=1.15 kg/m³

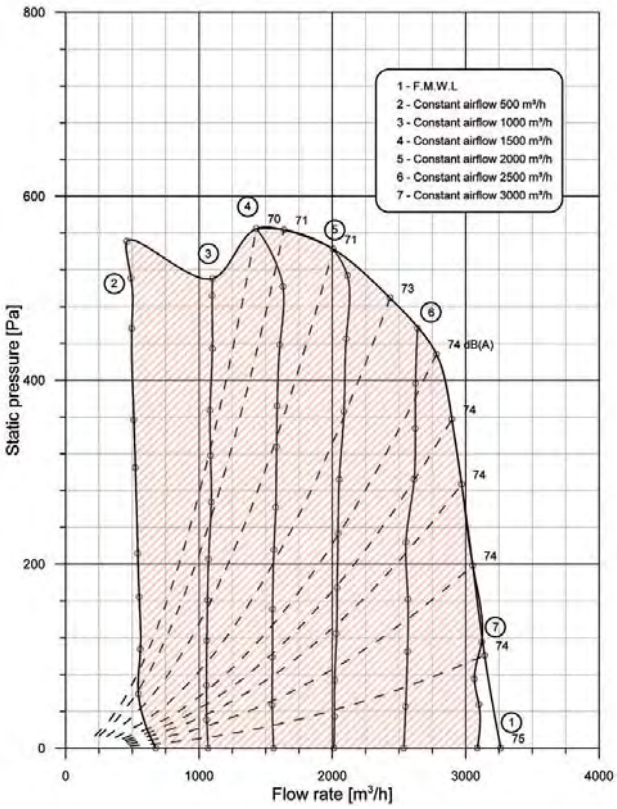

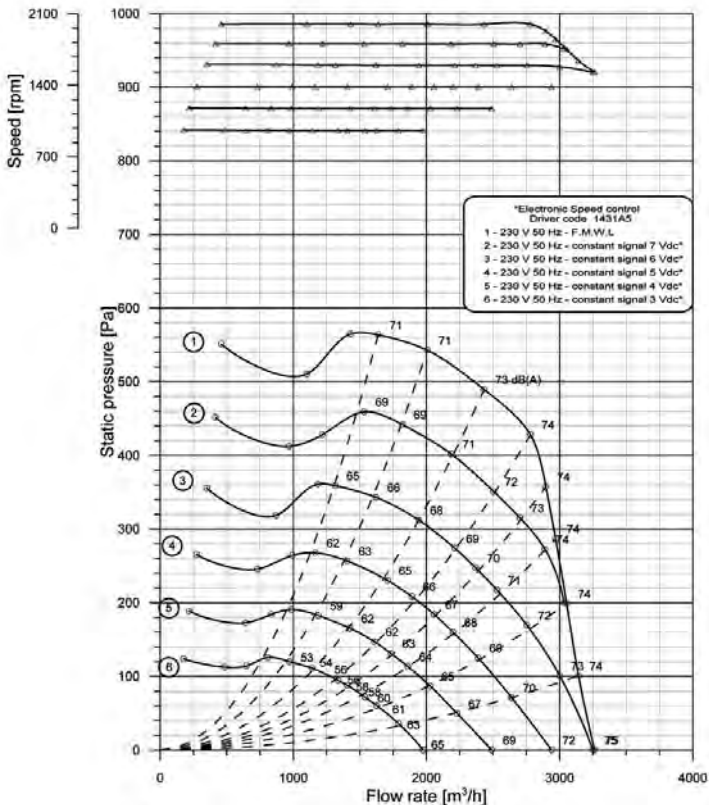

Dimensions in mm, subject to change

fan code 6M04A0

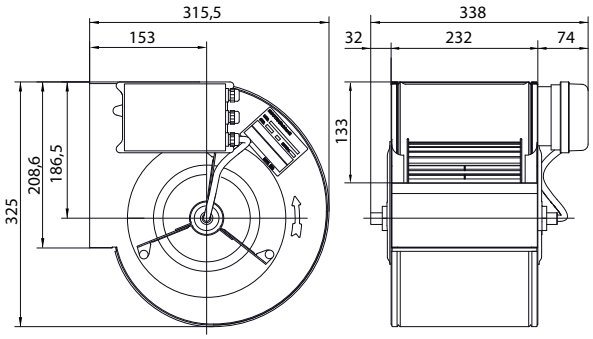

6M04E0 with flange

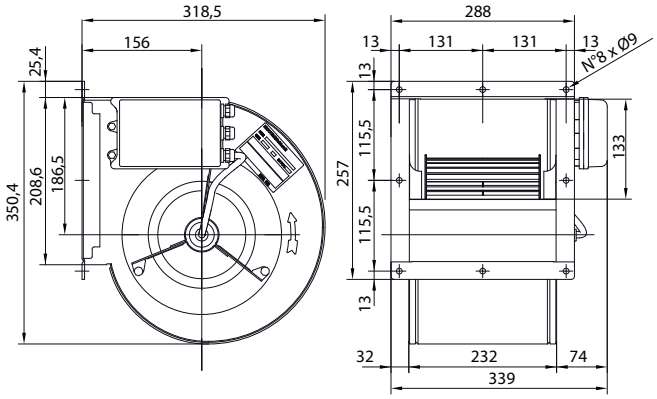

Working point		Sound pressure level for inlet side (Lp) in dB								
	(m³/h)	63	125	250	500	1k	2k	4k	8kHz	LpA
230V / 50Hz	459	63.2	63.4	72.0	63.5	60.7	58.4	54.1	50.8	67.7
10Vdc	1101	63.9	64.7	73.9	65.1	62.3	59.7	55.4	52.0	69.3
	1431	60.5	63.4	73.8	65.1	60.7	62.7	56.3	53.4	69.6
	1638	55.6	62.7	74.6	66.5	60.7	63.2	57.4	54.7	70.6
	2007	53.5	64.9	73.8	67.2	60.7	64.6	58.8	56.4	71.1
	2433	56.2	64.1	75.1	69.4	60.7	66.1	61.2	58.7	73.0
	2781	58.7	65.6	73.5	69.2	67.7	67.5	63.3	60.7	73.8
	2897	58.4	66.9	73.5	69.3	67.9	67.7	63.8	61.2	74.0
	2970	57.0	64.6	72.9	69.7	69.2	67.8	64.0	61.4	74.4
	3053	60.1	64.1	72.6	68.3	68.2	67.9	64.1	61.5	73.9
	3142	64.2	64.4	72.5	68.7	68.1	68.3	64.5	61.8	74.2
	3263	66.8	64.7	74.2	68.7	70.2	68.8	65.3	62.6	75.2

NICOTRA Gebhardt

DDMP 7/7 TIG

Wmax.abs.:	1065	Amp Max:	4.59
Volt:	220/240 1~	Prot.:	IP 44
Hz:	50	T.H.:	YES-IN
Poles:	8	Ins. Cl.:	F

Curves in class 2 according to DIN 24166 q_l=1.15 kg/m³

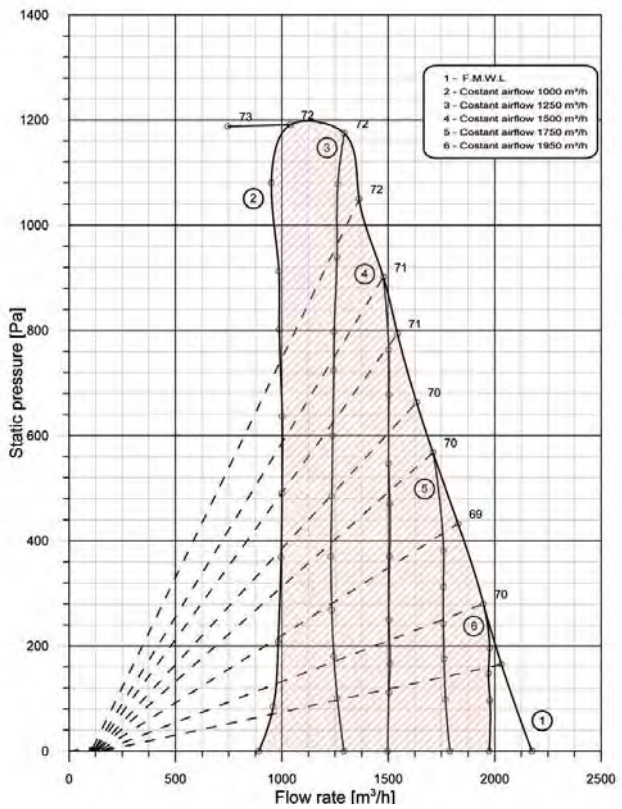

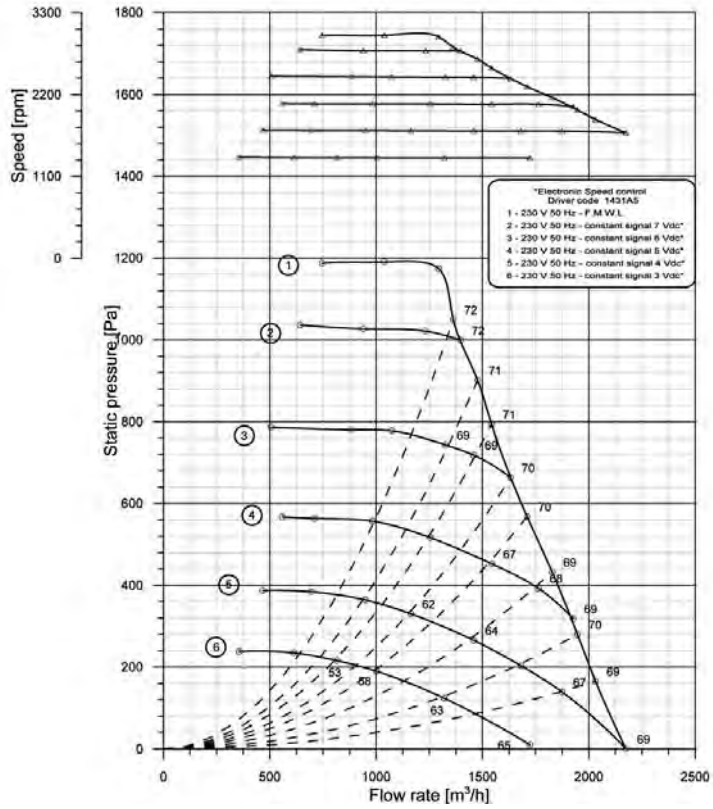

Dimensions in mm, subject to change

fan code 6M04A8

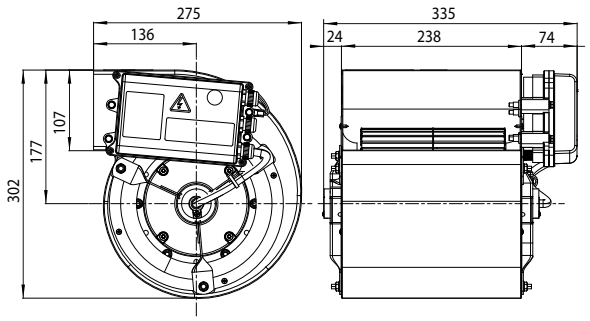

6M04X1 with flange

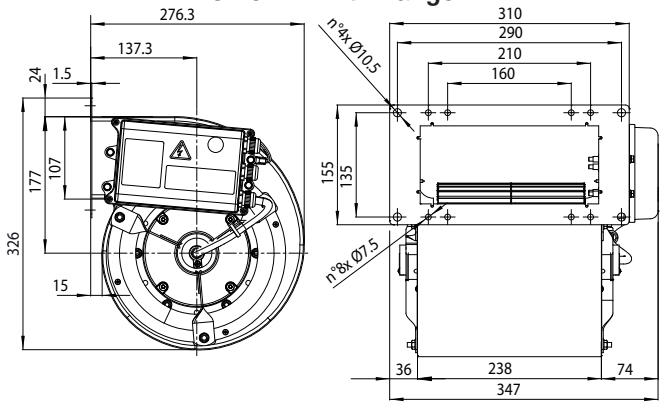

Working point		Sound pressure level for inlet side (Lp) in dB									
	(m³/h)	63	125	250	500	1k	2k	4k	8kHz		LpA
230V / 50Hz	747	65.6	73.6	74.6	67.6	66.2	66.8	60.8	56.9		73.0
10Vdc	1039	62.5	68.4	73.0	65.6	65.6	67.3	60.9	56.8		72.3
	1294	59.6	65.3	71.2	66.0	65.8	67.8	61.3	57.1		72.4
	1363	58.5	63.3	71.2	66.0	65.4	67.5	60.8	56.4		72.1
	1477	57.5	63.4	69.0	63.8	64.6	67.2	59.9	55.6		71.3
	1543	54.0	63.3	67.9	63.6	64.4	66.5	59.4	55.0		70.7
	1633	50.3	61.7	67.0	62.2	64.0	65.7	59.0	54.7		70.0
	1710	56.7	59.6	66.3	61.9	63.7	65.2	58.6	54.3		69.6
	1828	52.4	58.1	64.7	61.4	63.9	64.7	58.4	54.3		69.2
	1947	45.8	57.9	65.2	61.3	65.4	64.7	58.6	54.5		69.8
	2032	51.4	57.2	64.8	61.7	64.1	64.8	58.8	54.7		69.4
	2175	60.7	60.9	63.3	61.7	64.1	64.7	59.1	55.2		69.3

NICOTRA Gebhardt

DDMP 7/9

Wmax.abs.:	1048	Amp Max:	4.5
Volt:	220/240 1~	Prot.:	IP 44
Hz:	50	T.H.:	YES-IN
Poles:	8	Ins. Cl.:	F

Curves in class 2 according to DIN 24166 q_1=1.15 kg/m³

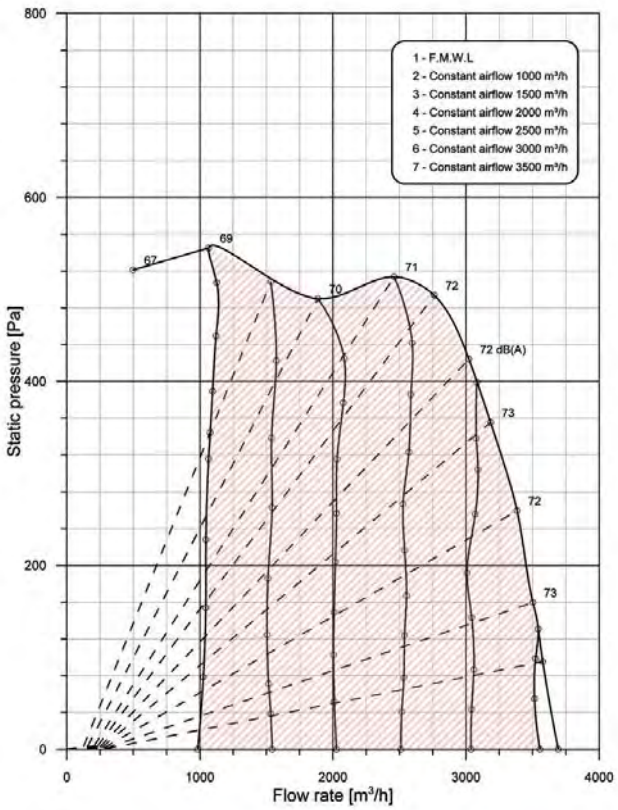

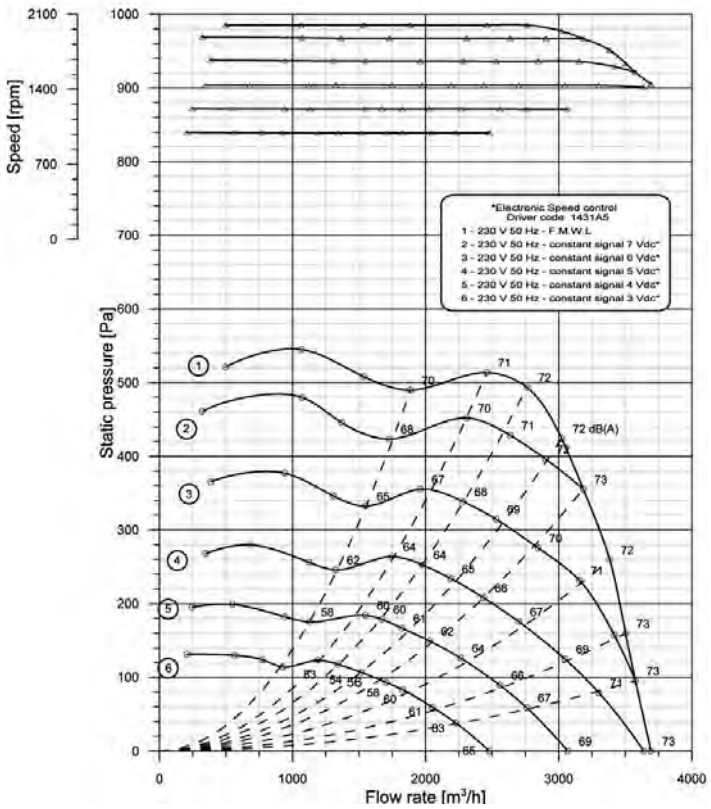

Dimensions in mm, subject to change

fan code 6M04C7

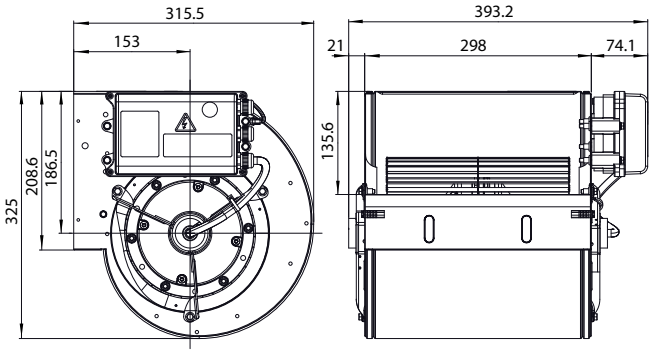

6M04F7 with flange

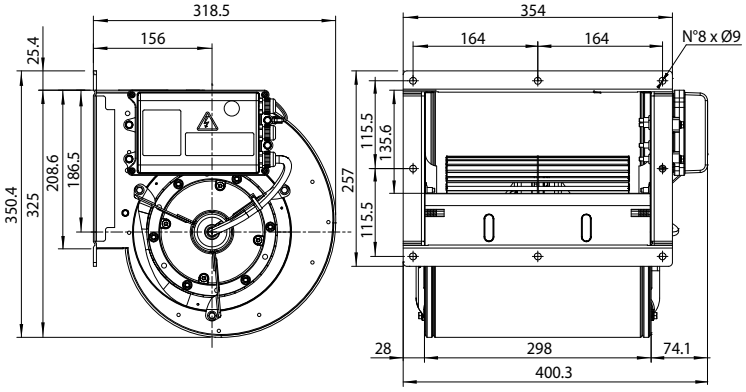

Working point		Sound pressure level for inlet side (Lp) in dB								
	(m³/h)	63	125	250	500	1k	2k	4k	8kHz	LpA
230V / 50Hz	498	63.3	70.8	70.6	63.4	57.6	56.9	53.8	49.4	67.7
10Vdc	1066	65.5	71.0	72.0	67.1	59.9	59.0	54.8	50.5	68.8
	1533	65.9	71.8	73.3	66.9	61.0	60.0	55.7	51.5	69.6
	1887	61.8	71.8	74.2	67.7	61.4	60.6	56.3	52.3	70.3
	2460	58.8	70.0	74.2	68.8	63.3	62.5	58.0	54.5	71.2
	2762	56.3	69.2	73.9	70.2	64.7	63.9	59.2	56.1	72.1
	3022	57.1	67.1	73.5	69.6	65.5	65.0	60.4	57.2	72.4
	3185	54.4	68.2	75.4	69.3	66.1	65.1	61.1	57.7	72.9
	3384	55.3	67.1	72.1	68.7	65.8	65.4	61.5	58.6	72.2
	3503	60.2	70.4	72.5	68.9	65.8	65.8	62.0	59.0	72.5
	3577	63.3	68.5	72.2	68.4	67.2	66.0	62.2	59.5	73.0
	3694	65.8	68.4	71.7	69.0	66.3	66.6	63.7	60.1	73.0

DDMP 8/7 TIG

Wmax.abs.:	1052	Amp Max:	4.51
Volt:	220/240 1~	Prot.:	IP 44
Hz:	50	T.H.:	YES-IN
Poles:	8	Ins. Cl.:	F

Curves in class 2 according to DIN 24166 q_1=1.15 kg/m³

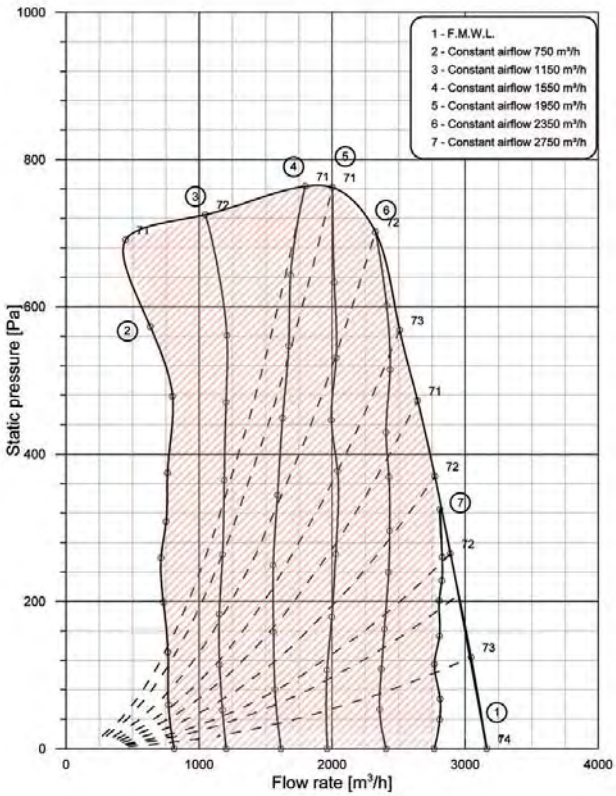

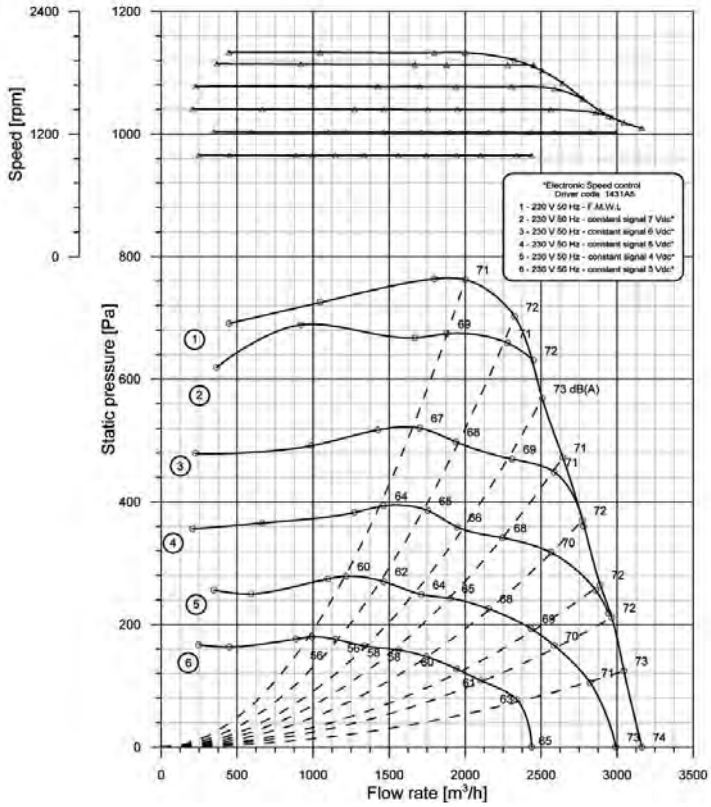

Dimensions in mm, subject to change

fan code 6M04A5

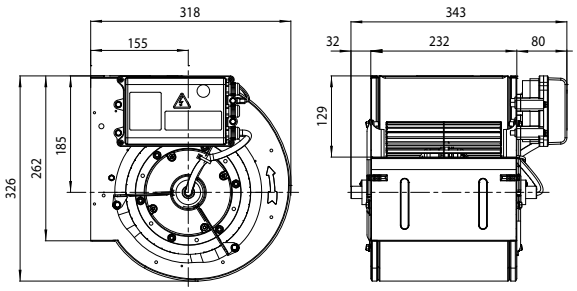

6M04E5 with flange

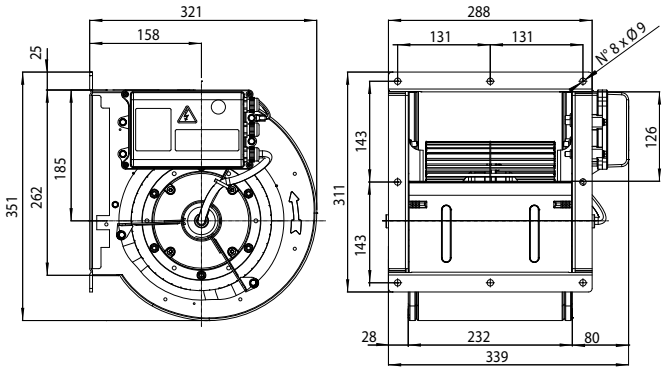

Working point		Sound pressure level for inlet side (Lp) in dB								
	(m³/h)	63	125	250	500	1k	2k	4k	8kHz	LpA
230V / 50Hz	447	66.7	73.0	74.4	68.3	63.3	61.5	56.8	53.0	71.0
10Vdc	1047	66.5	72.4	74.3	69.1	63.6	63.2	57.8	54.2	71.5
	1789	56.6	67.0	71.5	68.4	63.0	63.8	58.4	54.9	70.7
	2002	56.1	66.0	70.1	68.3	63.8	64.0	58.4	56.0	70.8
	2326	58.8	66.4	71.5	68.0	65.2	65.6	59.4	57.1	71.8
	2508	61.2	67.7	71.3	68.8	69.2	65.6	60.6	57.7	73.2
	2643	60.9	69.7	69.7	66.2	66.1	64.9	60.8	57.8	71.4
	2773	60.6	66.4	68.7	65.8	67.5	64.8	61.0	58.2	71.7
	2889	61.5	64.5	68.0	65.0	67.2	65.0	61.3	58.6	71.5
	2965	61.2	67.3	69.6	65.6	66.2	65.3	62.1	59.1	71.5
	3045	68.0	72.6	74.5	67.0	68.1	65.7	62.6	59.4	73.2
	3163	68.9	73.1	76.0	68.7	67.1	67.1	63.2	59.2	73.7

DDMP 8/9 TIG

Wmax.abs.:	1049	Amp Max:	4.52
Volt:	220/240 1~	Prot.:	IP 44
Hz:	50	T.H.:	YES-IN
Poles:	8	Ins. Cl.:	F

Curves in class 2 according to DIN 24166 q_1=1.15 kg/m³

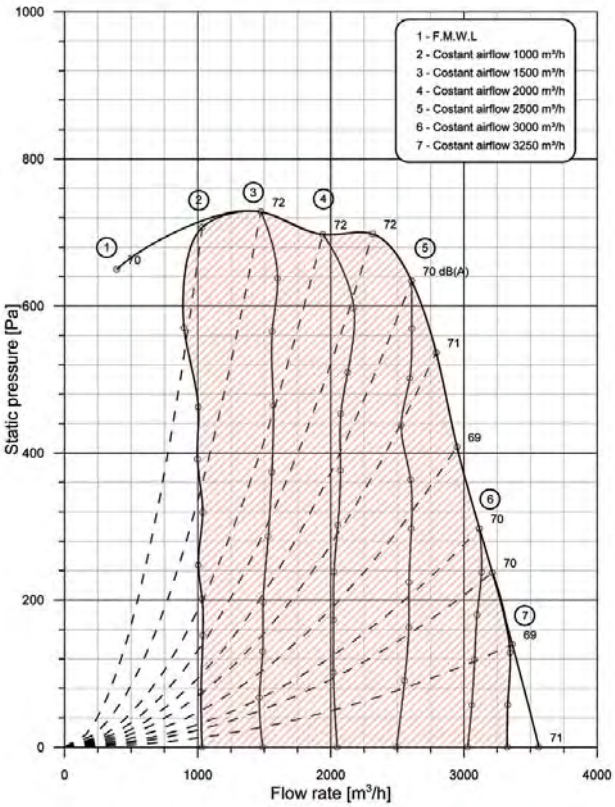

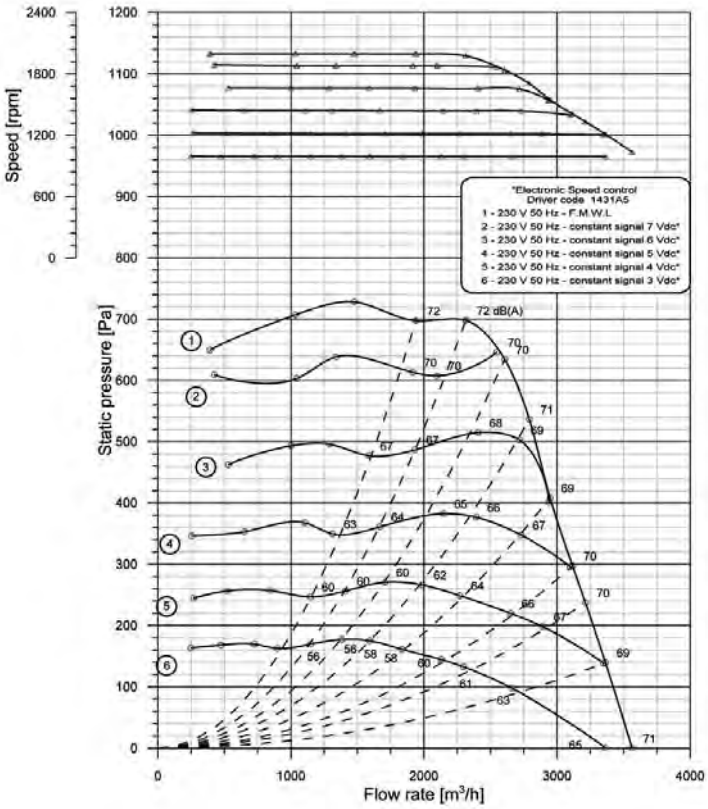

Dimensions in mm, subject to change

fan code 6M04A6

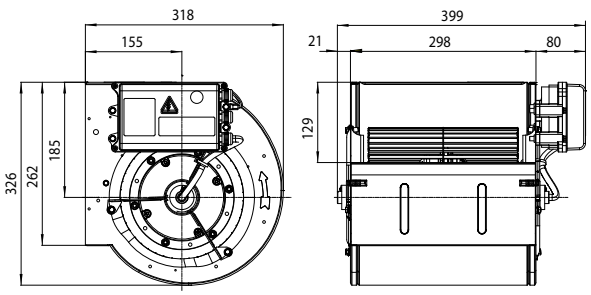

6M04E6 with flange

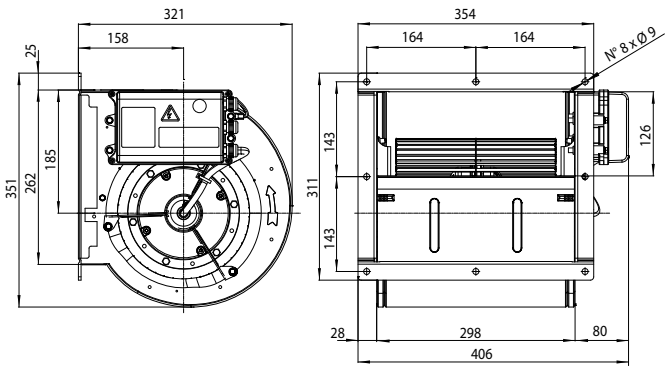

Working point		Sound pressure level for inlet side (Lp) in dB								
	(m³/h)	63	125	250	500	1k	2k	4k	8kHz	LpA
230V / 50Hz	392	73.3	76.4	74.7	64.9	60.7	62.3	54.7	51.0	70.3
10Vdc	1034	76.4	75.2	75.1	66.0	61.8	63.7	55.6	52.3	71.0
	1475	74.4	77.0	75.2	67.6	63.0	66.4	56.8	53.5	72.4
	1940	70.7	75.2	74.8	67.3	63.2	66.0	57.5	54.4	72.0
	2315	67.1	71.8	74.0	67.6	63.2	65.9	57.8	54.9	71.6
	2607	58.8	69.2	70.8	65.5	64.2	64.1	57.6	54.9	70.2
	2792	60.5	67.1	75.6	64.0	63.5	63.6	57.9	55.0	71.0
	2948	61.5	68.0	69.8	63.3	63.8	63.3	58.1	55.5	69.5
	3117	60.2	65.4	68.1	62.8	66.6	63.6	58.7	56.2	70.3
	3214	60.0	65.3	67.0	63.1	64.6	63.8	59.1	56.5	69.6
	3364	64.6	66.1	67.2	63.0	63.0	64.2	59.8	57.3	69.5
	3564	68.6	66.0	67.6	63.8	67.3	65.2	61.3	58.4	71.4

NICOTRA Gebhardt

DDMP 9/7

Wmax.abs.:	1036	Amp Max:	4.51
Volt:	220/240 1~	Prot.:	IP 44
Hz:	50	T.H.:	YES-IN
Poles:	8	Ins. Cl.:	F

Curves in class 2 according to DIN 24166 q_1=1.15 kg/m³

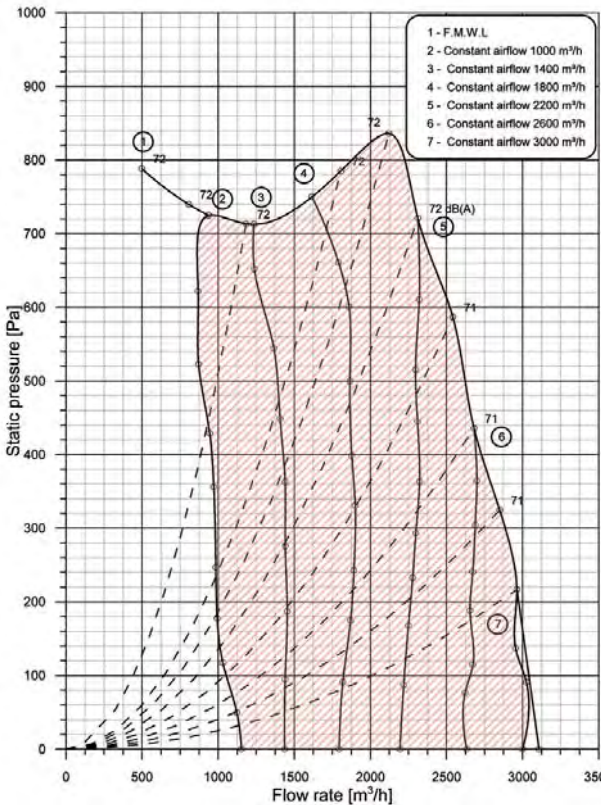

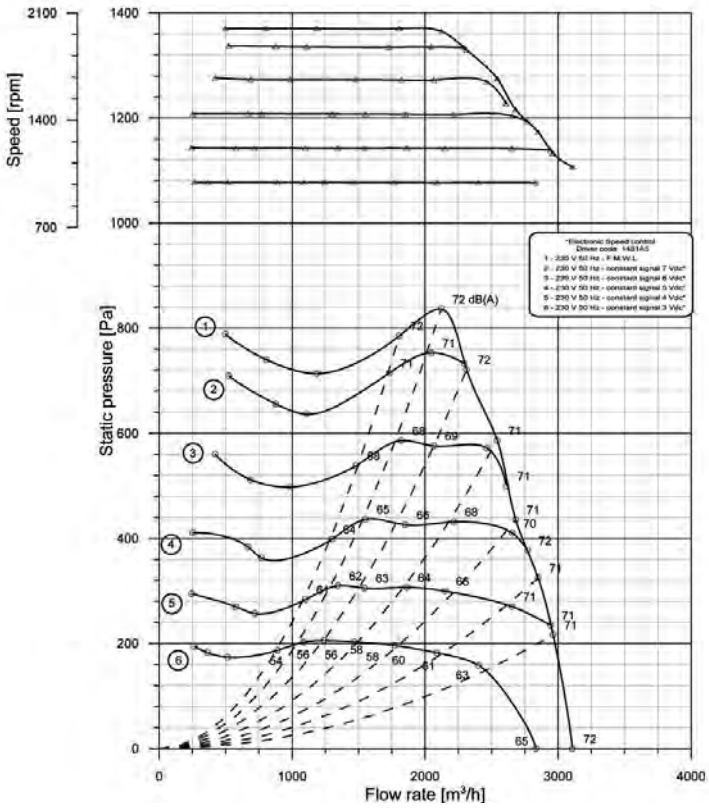

Dimensions in mm, subject to change

fan code 6M04A1

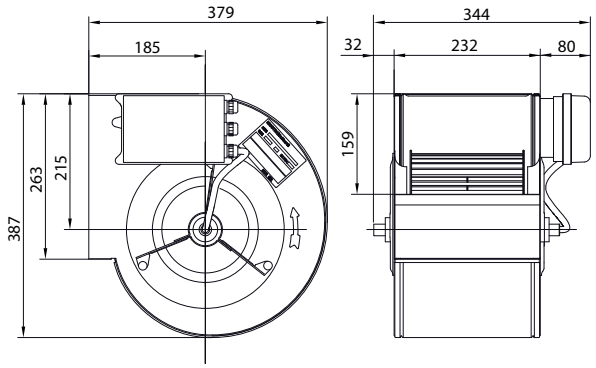

6M04E1 with flange

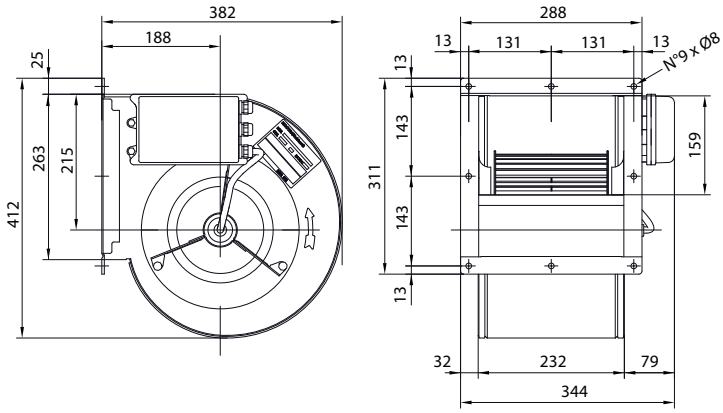

Working point		Sound pressure level for inlet side (Lp) in dB								
	(m³/h)	63	125	250	500	1k	2k	4k	8kHz	LpA
230V / 50Hz	498	69.9	74.9	76.5	67.6	63.5	62.7	58.8	54.6	72.0
10Vdc	806	70.0	75.9	76.5	67.2	63.5	62.9	59.2	55.1	72.1
	1183	70.3	76.4	76.6	67.3	64.0	63.1	59.7	55.4	72.3
	1806	64.7	73.6	76.2	67.6	64.6	63.3	60.3	56.2	72.1
	2122	57.0	71.3	75.2	67.1	65.9	64.5	61.7	57.4	72.4
	2312	56.2	68.3	73.8	65.9	66.9	63.6	61.5	57.1	71.9
	2542	56.2	66.8	73.5	66.1	65.8	63.5	61.3	56.4	71.5
	2681	56.4	66.5	70.3	64.0	66.1	63.5	60.2	55.1	70.6
	2850	53.5	64.1	68.7	63.0	68.4	64.1	60.5	55.9	71.5
	2963	55.9	65.4	69.8	63.3	67.5	64.5	61.1	56.3	71.4
	3108	69.6	71.0	73.6	65.4	66.2	64.9	61.1	56.1	71.9

NICOTRA Gebhardt

DDMP 225/240

Wmax.abs.:	1044	Amp Max:	4.48
Volt:	220/240 1~	Prot.:	IP 44
Hz:	50	T.H.:	YES-IN
Poles:	8	Ins. Cl.:	F

Curves in class 2 according to DIN 24166 q_1=1.15 kg/m³

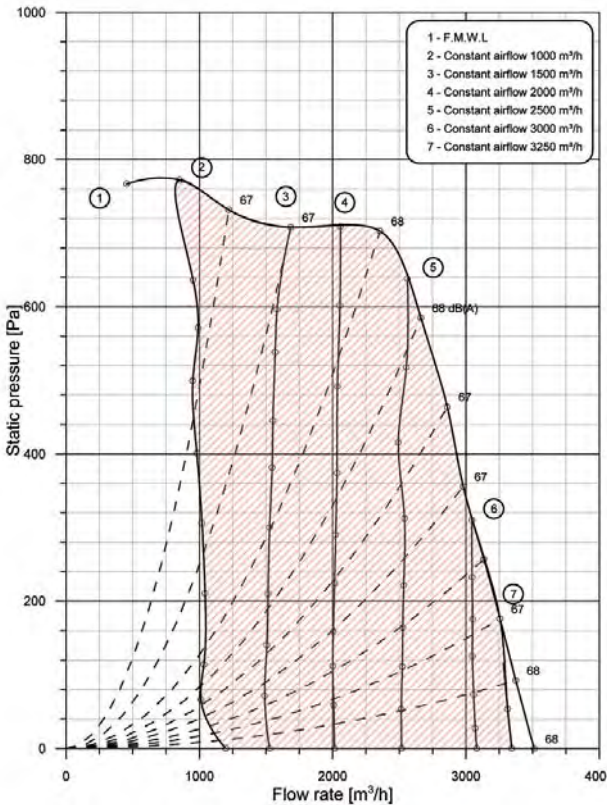

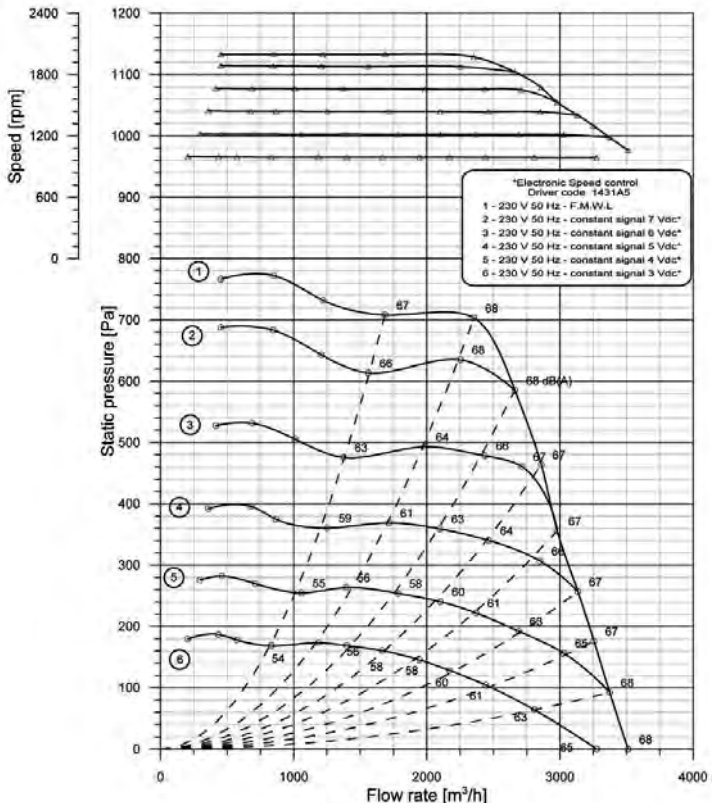

Dimensions in mm, subject to change

fan code 6M04A9

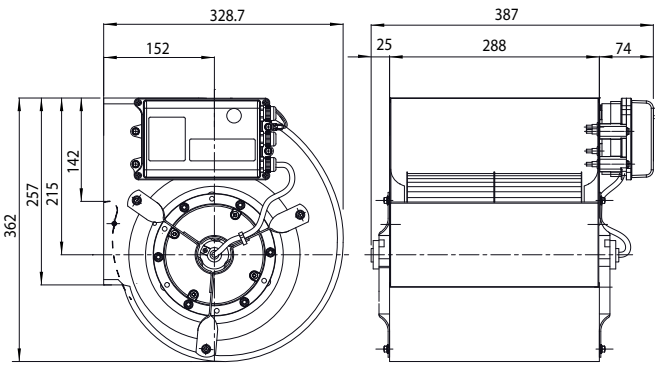

6M04E9 with flange

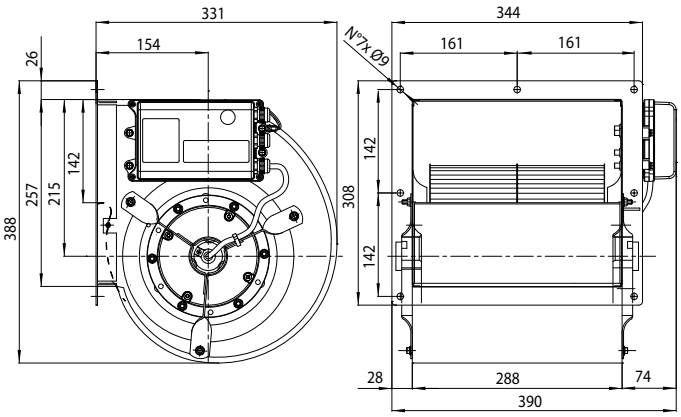

Working point		Sound pressure level for inlet side (Lp) in dB									
	(m³/h)	63	125	250	500	1k	2k	4k	8kHz		LpA
230V / 50Hz	454	70.2	71.1	69.8	62.7	58.5	58.1	53.5	49.9		66.6
10Vdc	852	70.2	70.8	69.1	62.4	58.8	58.4	54.1	50.4		66.5
	1221	73.4	71.4	70.4	62.7	59.5	58.8	54.1	50.7		67.2
	1686	70.4	72.0	70.6	61.6	59.5	59.0	54.5	51.5		67.2
	2355	64.7	71.6	71.5	62.4	61.4	60.4	56.0	53.3		68.3
	2662	70.3	68.4	70.9	62.9	62.7	60.2	55.8	52.9		68.3
	2860	60.1	67.6	69.2	62.2	61.9	59.6	55.5	52.2		67.4
	2980	60.7	69.3	68.3	61.6	61.0	59.5	55.3	51.9		66.9
	3135	58.5	64.0	67.9	61.7	62.0	59.9	55.6	51.8		67.0
	3256	60.1	64.3	66.1	62.5	62.0	60.2	55.8	51.9		67.0
	3374	62.5	63.7	65.4	61.9	63.4	60.9	56.4	52.1		67.6
	3512	66.5	63.5	66.5	62.0	63.2	61.5	58.4	52.6		68.0

NICOTRA Gebhardt

DDMP 9/9

Wmax.abs.:	1040	Amp Max:	4.50
Volt:	220/240 1~	Prot.:	IP 44
Hz:	50	T.H.:	YES-IN
Poles:	8	Ins. Cl.:	F

Curves in class 2 according to DIN 24166 q_1=1.15 kg/m³

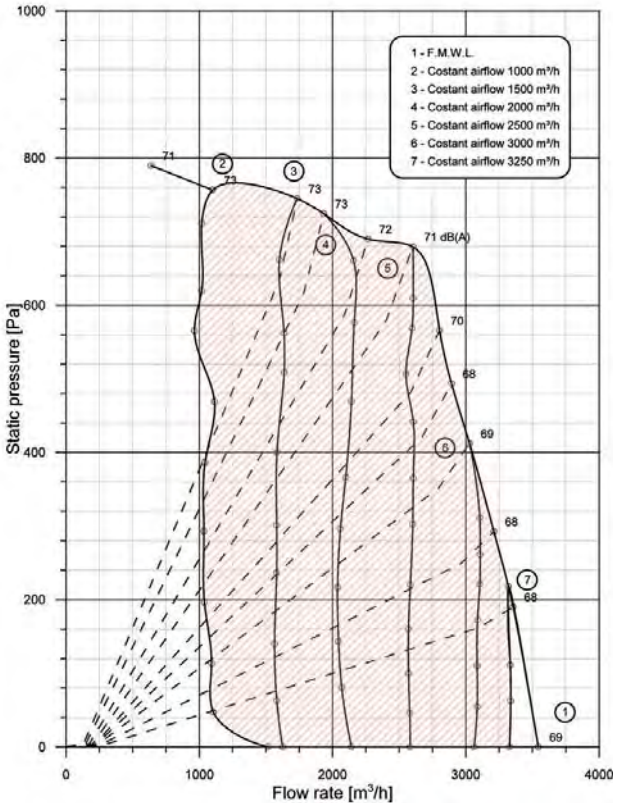

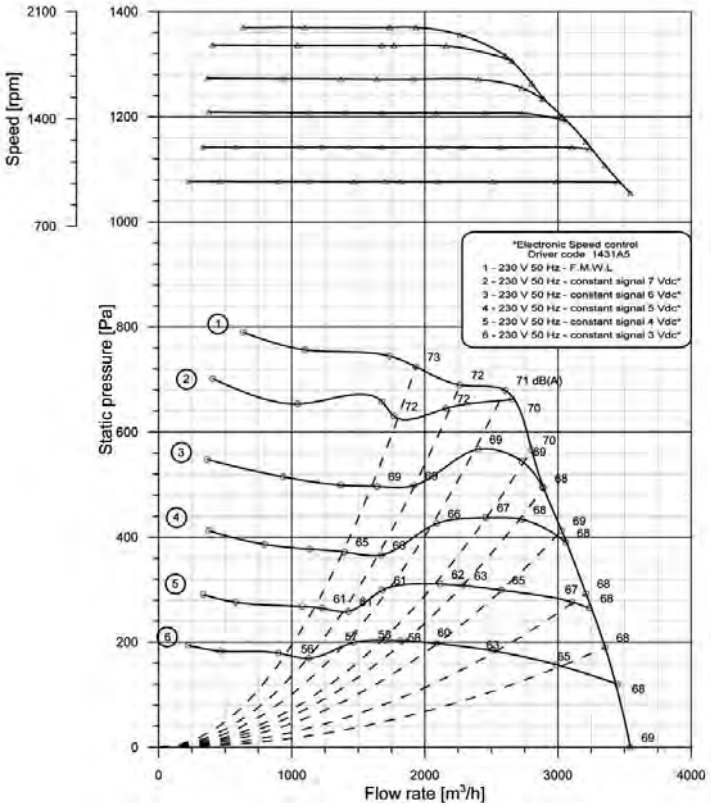

Dimensions in mm, subject to change

fan code 6M04A2

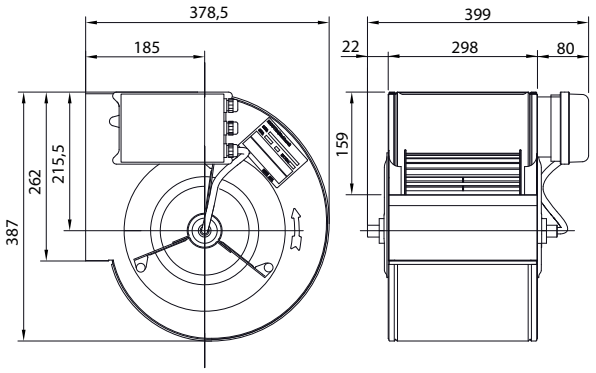

6M04E2 with flange

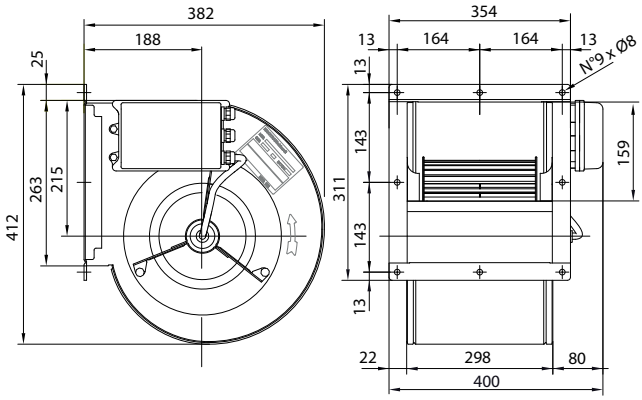

Working point		Sound pressure level for inlet side (Lp) in dB									
	(m³/h)	63	125	250	500	1k	2k	4k	8kHz		LpA
230V / 50Hz	638	71.1	78.0	76.1	63.6	61.7	61.0	56.9	52.2		71.0
10Vdc	1100	73.2	79.8	78.8	65.8	63.2	63.2	59.0	52.8		73.3
	1735	72.9	78.3	77.8	65.9	63.6	63.4	59.8	56.0		72.8
	1934	74.0	78.4	78.6	66.3	64.3	63.6	60.8	54.4		73.4
	2265	72.9	75.9	77.6	65.5	64.0	63.0	60.9	54.2		72.5
	2603	58.5	70.7	74.8	64.0	64.5	62.0	60.8	54.0		70.9
	2803	58.8	68.5	73.1	64.0	63.8	61.3	59.7	51.7		69.9
	2893	57,1	67.5	71.8	62.1	61.8	61.5	56.3	50.3		68.5
	3028	57.2	67.4	71.8	61.5	62.4	61.7	56.6	50.3		68.6
	3211	56.5	67.6	70.0	61.6	62.8	62.3	56.9	51.1		68.5
	3355	61.0	67.1	69.9	60.6	62.4	62.5	57.5	51.9		68.4
	3544	69.3	70.9	72.1	62.0	62.4	63.1	58.1	51.8		69.4

NICOTRA Gebhardt

DDMP 10/8

Wmax.abs.:	1036	Amp Max:	4.51
Volt:	220/240 1~	Prot.:	IP 44
Hz:	50	T.H.:	YES-IN
Poles:	8	Ins. Cl.:	F

Curves in class 2 according to DIN 24166 q_1=1.15 kg/m³

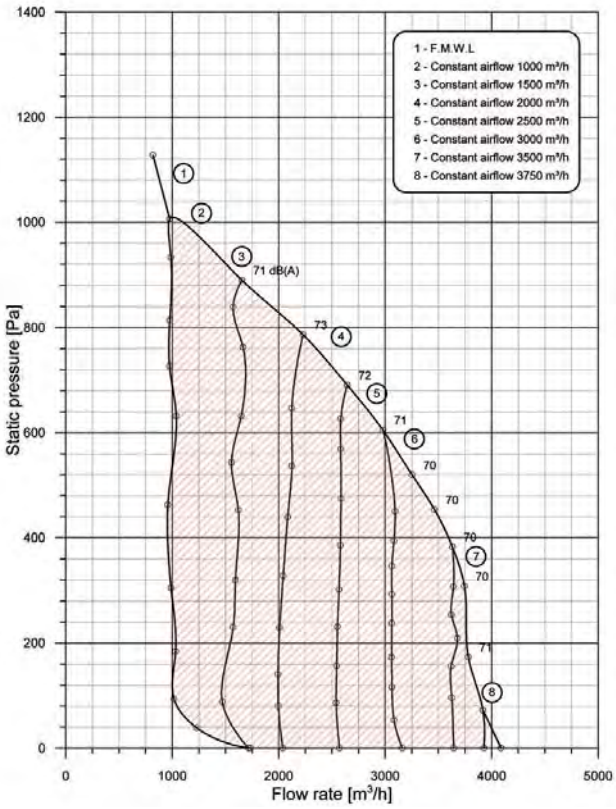

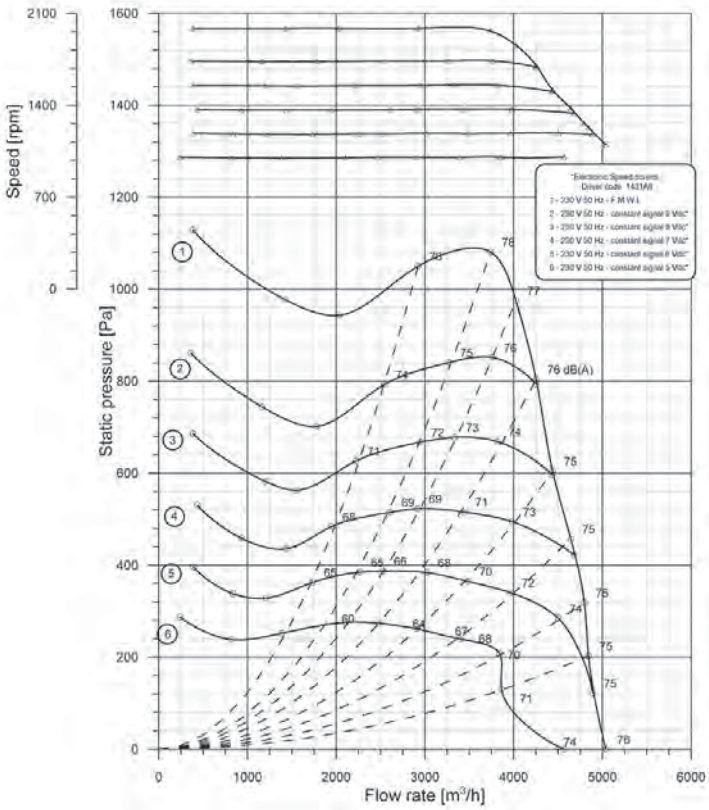

Dimensions in mm, subject to change

fan code 6M04A3

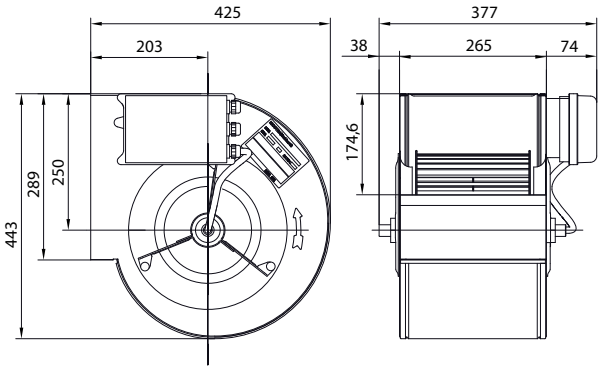

6M04E3 with flange

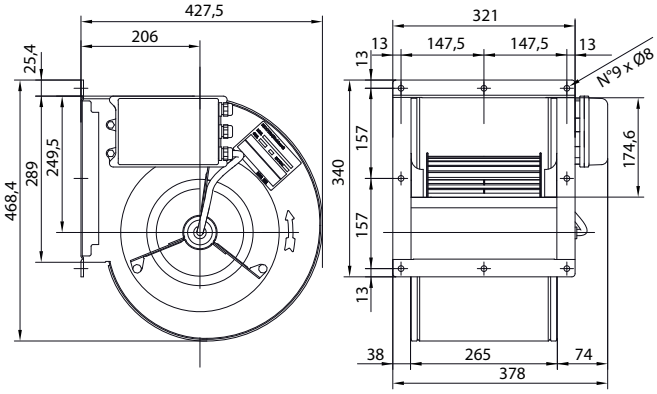

Working point		Sound pressure level for inlet side (Lp) in dB								
	(m³/h)	63	125	250	500	1k	2k	4k	8kHz	LpA
230V / 50Hz	819	81.3	81.0	81.7	70.5	60.7	66.1	62.7	57.6	76.4
10Vdc	976	82.3	81.9	81.2	70.0	66.5	66.2	62.4	57.4	76.1
	1655	79.5	80.9	80.2	68.0	65.8	64.9	61.4	56.6	75.0
	2229	69.5	78.6	78.2	64.9	64.8	62.9	60.0	55.0	73.0
	2644	60.2	74.6	76.2	63.7	65.0	61.8	59.1	55.6	71.5
	2979	58.6	69.8	73.7	63.5	65.9	61.4	59.3	54.2	70.7
	3253	58.0	69.9	72.1	62.8	64.6	61.8	59.2	54.4	69.8
	3463	59.3	71.9	70.2	61.9	65.5	62.8	59.9	54.6	70.0
	3632	60.0	69.1	70.9	61.8	65.6	63.3	60.4	55.0	70.3
	3745	60.3	68.3	67.8	61.5	65.6	63.2	59.8	54.8	69.8
	3781	72.7	74.1	73.8	62.8	65.7	63.5	59.8	54.6	71.2
	4088	76.6	72.0	74.2	62.6	64.4	64.3	61.6	55.3	70.9

NICOTRA Gebhardt

DDMP 10/10

Wmax.abs.:	1029	Amp Max:	4.38
Volt:	220/240 1~	Prot.:	IP 44
Hz:	50	T.H.:	YES-IN
Poles:	8	Ins. Cl.:	F

Curves in class 2 according to DIN 24166 q_1=1.15 kg/m³

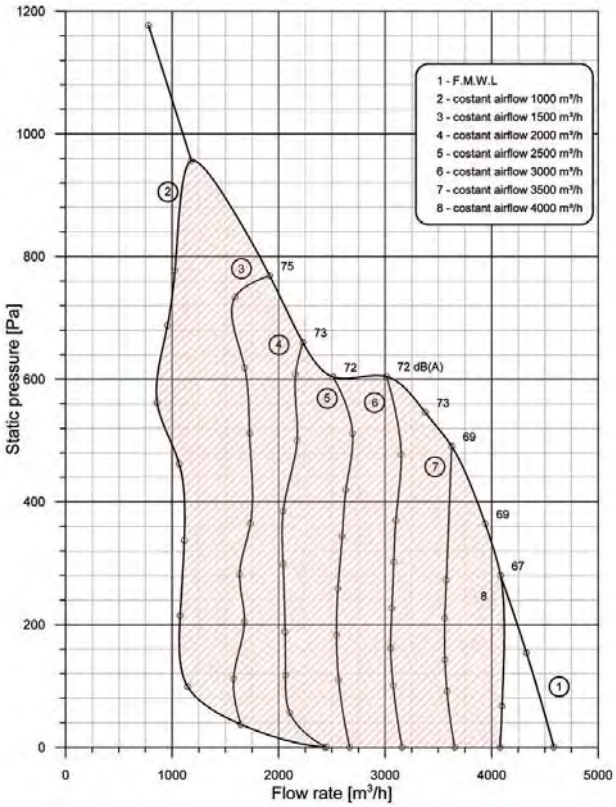

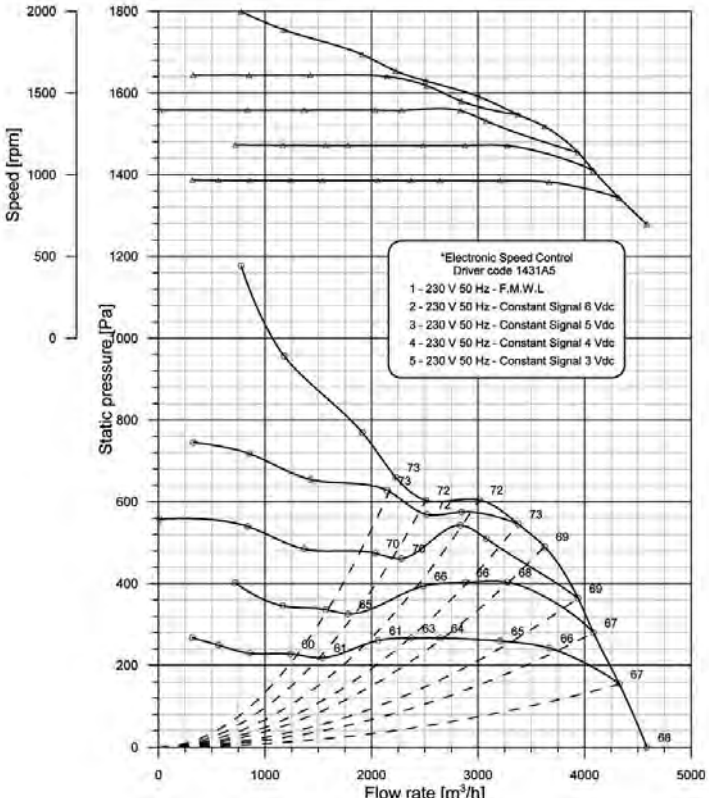

Dimensions in mm, subject to change

fan code 6M04A4

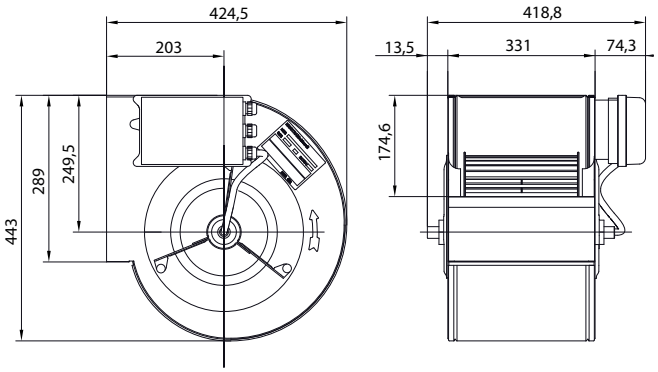

6M04E4 with flange

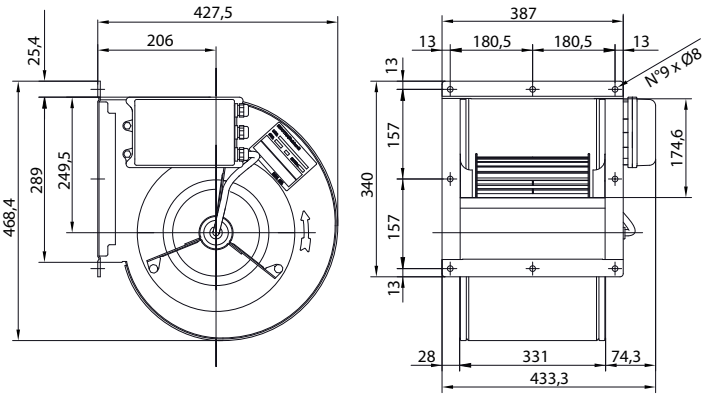

Working point		Sound pressure level for inlet side (Lp) in dB									
	(m³/h)	63	125	250	500	1k	2k	4k	8kHz		LpA
230V / 50Hz	778	69.8	82.0	81.4	68.2	66.1	65.1	62.8	58.6		75.9
10Vdc	1181	70.4	81.3	82.4	69.7	67.2	66.2	62.9	57.2		76.7
	1916	69.8	79.6	80.6	67.0	65.1	64.1	61.9	55.6		74.8
	2228	67.7	78.1	79.2	65.1	63.4	62.2	61.4	54.7		73.3
	2511	67.4	78.1	78.1	64.2	62.6	60.7	61.3	54.2		72.4
	3011	58.3	74.3	77.4	62.8	61.4	59.6	63.5	55.0		71.8
	3378	55.5	73.0	79.3	62.6	61.5	59.3	61.2	53.4		72.5
	3625	58.4	71.4	73.4	62.0	62.8	59.1	58.7	51.5		69.2
	3940	55.7	79.3	72.7	59.7	60.6	59.7	55.8	49.8		69.2
	4084	57.0	72.8	70.1	59.1	61.2	59.4	56.5	50.0		67.3
	4327	67.1	69.2	67.9	59.8	60.3	60.4	57.6	50.9		66.9
	4585	71.0	70.5	68.5	60.4	60.5	61.6	59.5	52.1		67.8

NICOTRA Gebhardt

DDMP 9/9 - 2kW

Wmax.abs.:	2213	Amp Max:	9.42
Volt:	220/240 1~	Prot.:	IP 44
Hz:	50	T.H.:	YES-IN
Poles:	8	Ins. Cl.:	F

Curves in class 2 according to DIN 24166 q_1=1.15 kg/m³

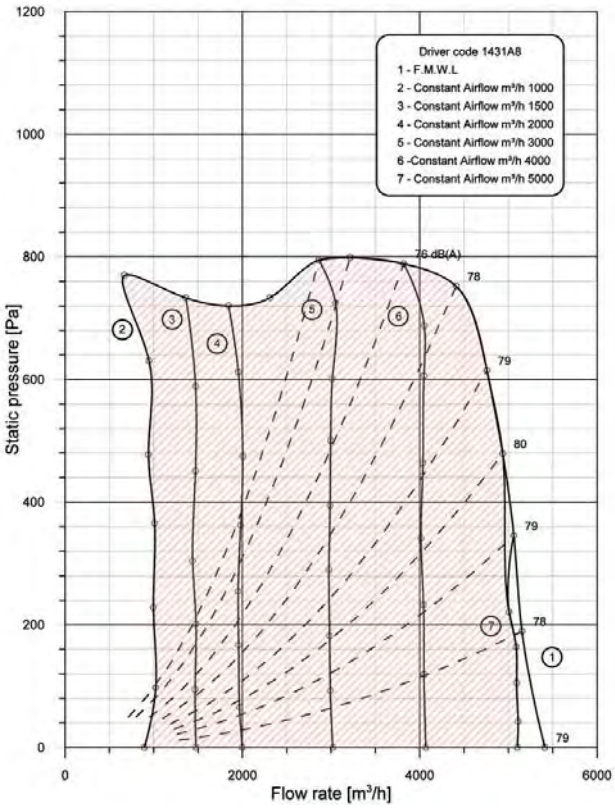

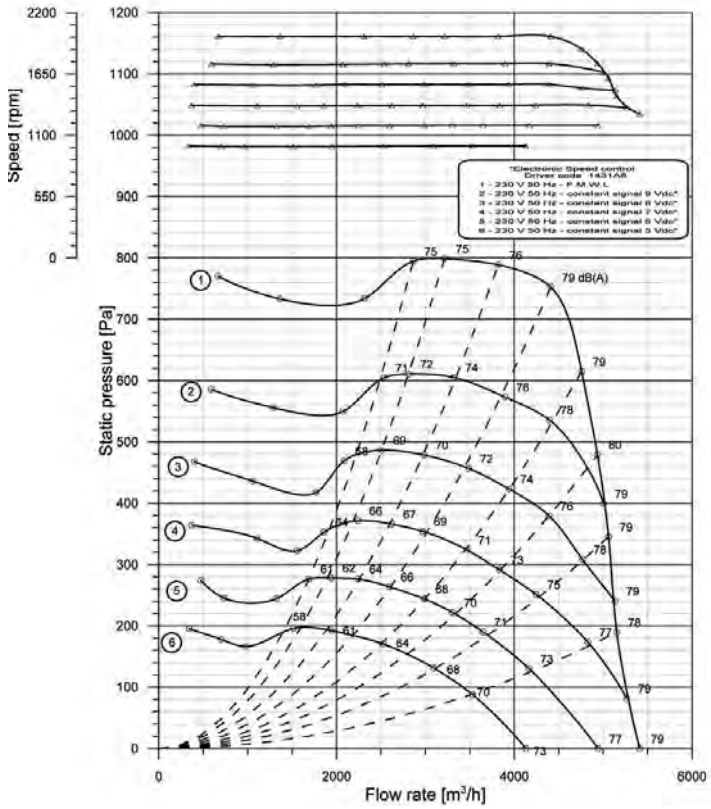

Dimensions in mm, subject to change

fan code 6M04H0

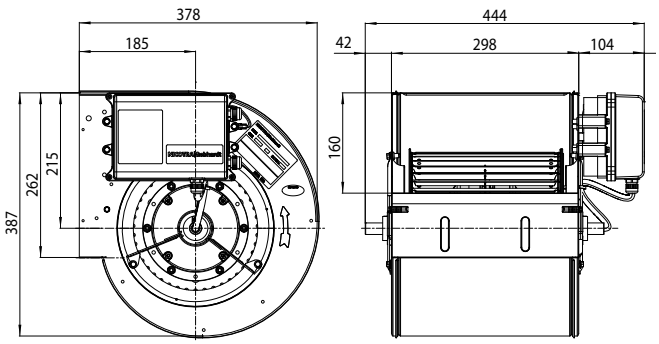

6M04K0 with flange

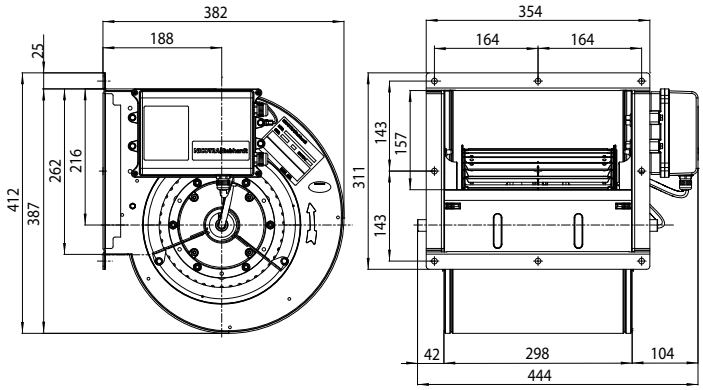

Working point		Sound pressure level for inlet side (Lp) in dB								
	(m³/h)	63	125	250	500	1k	2k	4k	8kHz	LpA
230V / 50Hz	670	73.2	75.8	75.5	65.0	62.4	62.3	56.2	50.4	70.8
10Vdc	1361	76.6	77.6	77.5	68.0	62.7	63.5	59.6	52.8	72.7
	2313	69.9	75.1	78.5	70.3	64.2	64.0	62.9	55.6	74.0
	2863	61.2	72.3	79.1	70.6	65.0	65.1	63.8	57.5	74.5
	3215	62.5	73.0	79.5	71.6	66.3	66.5	64.0	57.9	75.3
	3820	60.4	72.0	79.7	73.4	68.1	68.7	66.1	59.6	76.4
	4411	63.5	72.9	80.6	75.6	70.4	71.4	63.3	62.6	78.4
	4758	64.9	74.7	80.2	73.4	72.9	71.7	67.3	64.5	78.7
	4936	65.7	75.3	85.9	72.4	72.1	72.2	68.0	65.4	80.5
	5061	68.0	75.3	79.4	74.5	72.9	72.4	68.2	65.7	78.8
	5153	69.4	75.4	76.2	72.4	72.2	72.2	68.2	66.0	78.1
	5412	73.2	75.9	76.1	70.3	72.2	73.0	69.9	67.9	78.5

NICOTRA Gebhardt

DDMP 10/8 - 2kW

Wmax.abs.:	2208	Amp Max:	9.42
Volt:	220/240 1~	Prot.:	IP 44
Hz:	50	T.H.:	YES-IN
Poles:	8	Ins. Cl.:	F

Curves in class 2 according to DIN 24166 q_1=1.15 kg/m³

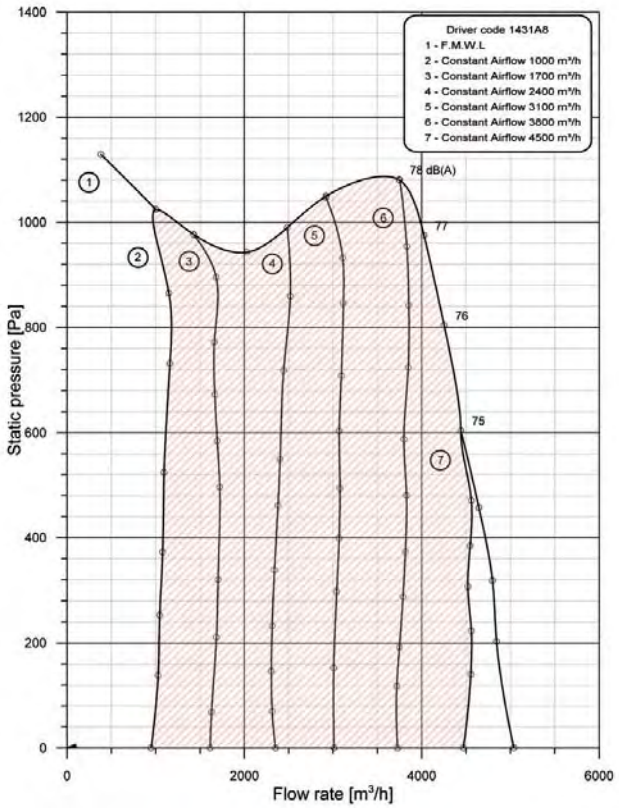

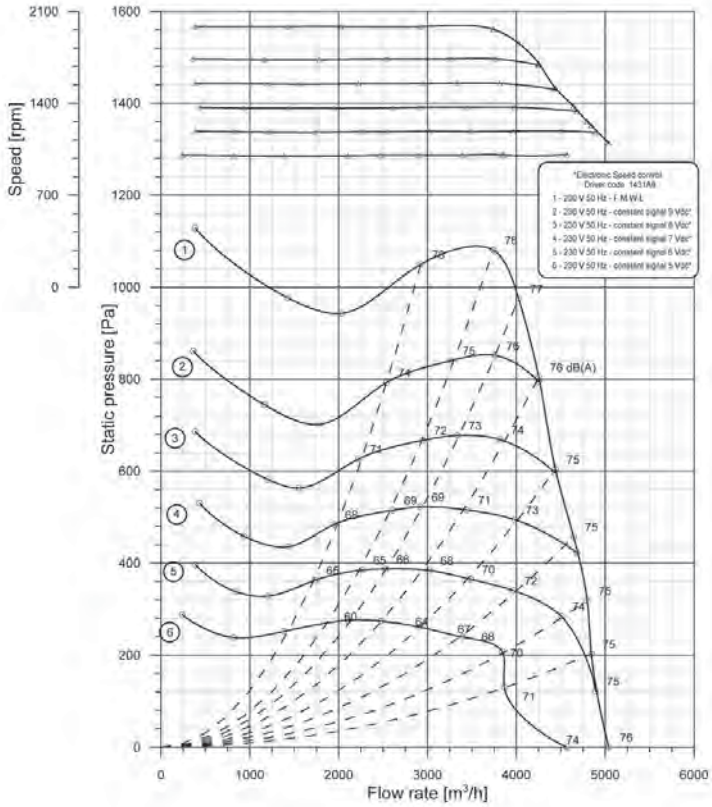

Dimensions in mm, subject to change

fan code 6M04H1

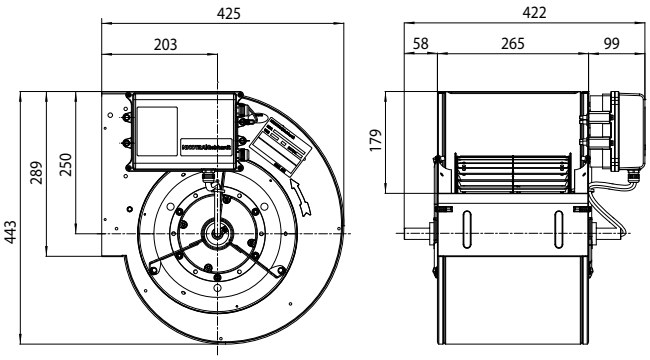

6M04K1 with flange

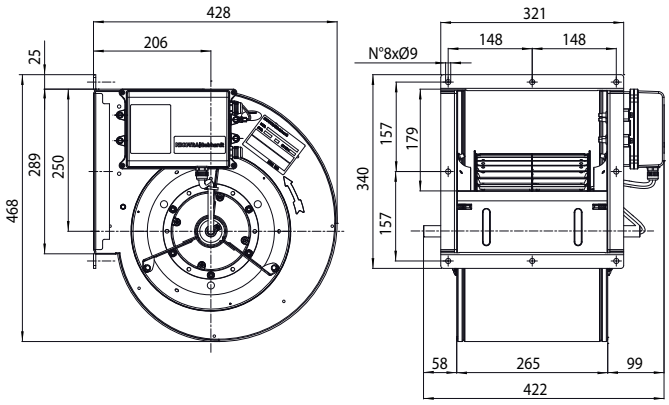

Working point		Sound pressure level for inlet side (Lp) in dB									
	(m³/h)	63	125	250	500	1k	2k	4k	8kHz		LpA
230V / 50Hz	385	77.3	81.5	80.8	74.4	67.5	67.3	63.4	57.4		77.0
10Vdc	1430	78.6	81.4	81.0	75.3	67.1	66.6	62.3	56.4		77.2
	2027	75.0	81.0	81.4	74.7	67.9	67.0	62.4	57.3		77.3
	2923	66.9	78.9	81.4	77.4	69.1	67.7	63.3	59.1		78.3
	3742	63.3	75.5	79.4	77.1	70.6	69.2	64.9	60.8		78.2
	4026	64.4	72.9	80.0	72.3	70.2	69.2	65.0	61.0		76.9
	4253	63.0	70.4	76.9	69.4	71.0	69.1	65.1	61.0		75.9
	4440	65.0	75.3	73.5	68.9	71.1	68.4	64.9	60.9		75.4
	4645	64.2	72.5	73.1	66.7	71.0	68.4	65.2	61.3		75.1
	4798	68.6	74.4	75.00	67.3	69.4	68.5	65.3	61.7		74.9
	4844	76.9	77.1	77.0	68.0	69.7	68.4	65.3	61.3		75.5
	5040	78.7	77.3	76.5	67.4	69.8	69.0	66.2	62.0		75.7

NICOTRA Gebhardt

DDMP 10/10 - 2kW

Wmax.abs.:	2202	Amp Max:	9.53
Volt:	220/240 1~	Prot.:	IP 44
Hz:	50	T.H.:	YES-IN
Poles:	8	Ins. Cl.:	F

Curves in class 2 according to DIN 24166 q_l=1.15 kg/m³

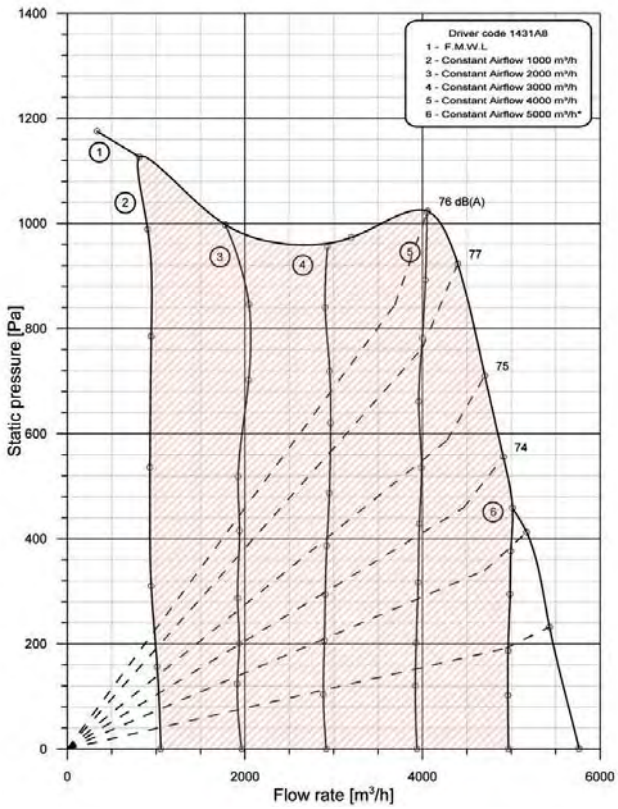

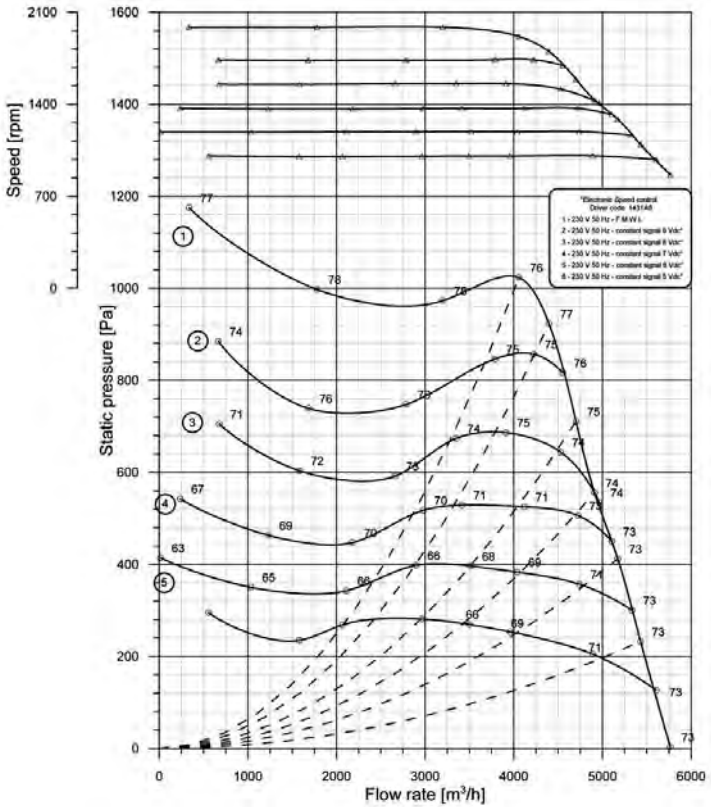

Dimensions in mm, subject to change

fan code 6M04H2

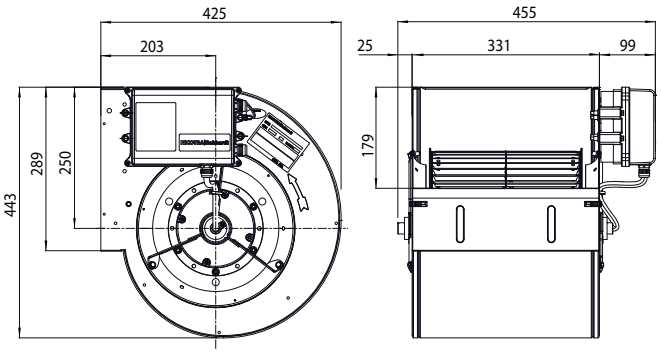

6M04K2 with flange

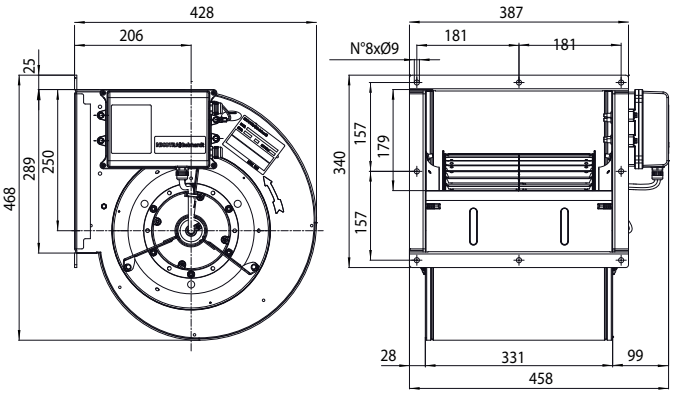

Working point		Sound pressure level for inlet side (Lp) in dB								
	(m³/h)	63	125	250	500	1k	2k	4k	8kHz	LpA
230V / 50Hz	337	72.4	81.0	82,0	70.9	66.9	65.7	62.9	57.2	76.5
10Vdc	1780	71.3	82.6	83.8	71.2	67.5	67.2	63.4	57.3	77.9
	3200	71.3	82.3	84.2	71.1	68.1	66.8	63.5	58.4	78.1
	4058	65.4	76.1	80.8	71.8	68.4	66.9	64.1	59.9	76.3
	4397	66.8	73.8	80.7	76.1	67.7	67.8	63.8	59.3	77.4
	4702	61.6	72.0	78.7	68.7	67.6	65.8	63.1	57.9	74.5
	4911	61.4	71.9	78.5	67.2	66.3	65.4	62.8	57.4	73.9
	5173	62.4	74.7	74.9	66.0	66.3	65.8	63.1	58.0	72.9
	5431	65.6	72.1	74.9	65.9	66.6	66.2	63.7	58.9	73.0
	5765	80.8	73.8	73.3	65.8	66.5	67.1	65.0	60.4	73.4

NICOTRA Gebhardt

HVAConline.com.au

DDMP 12/9 - 2kW

Wmax.abs.:	1764	Amp Max:	7.66
Volt:	220/240 1~	Prot.:	IP 44
Hz:	50	T.H.:	YES-IN
Poles:	8	Ins. Cl.:	F

Curves in class 2 according to DIN 24166 q_1=1.15 kg/m³

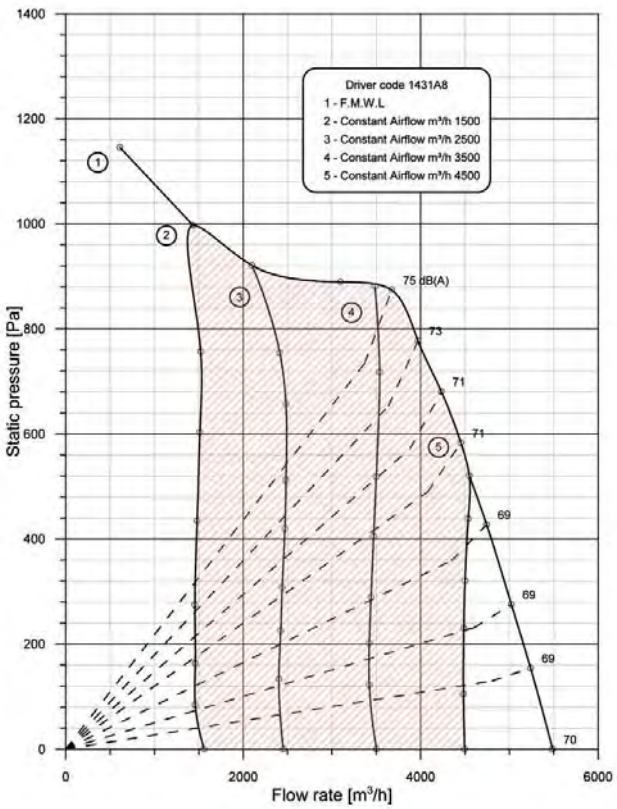

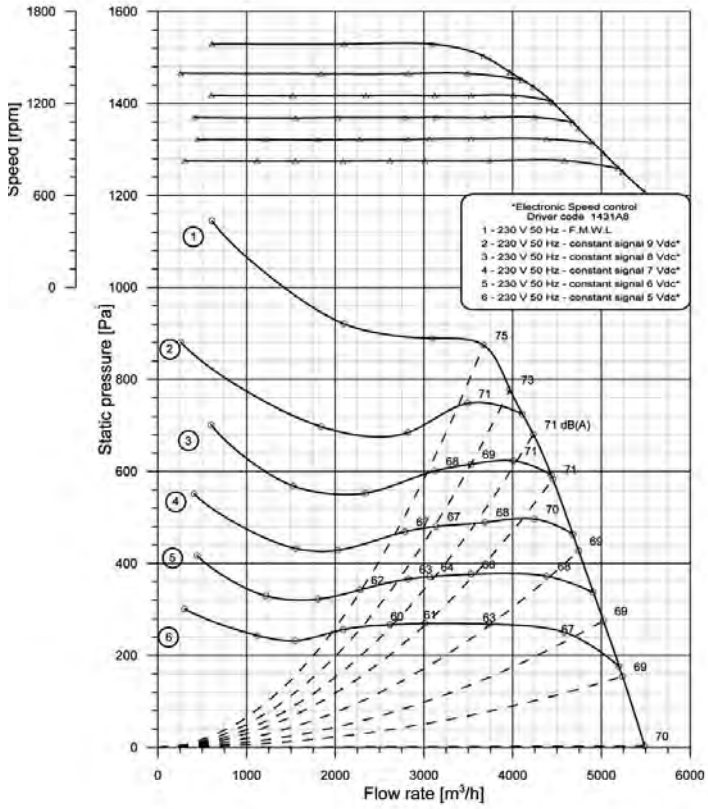

Dimensions in mm, subject to change

fan code 6M04H3

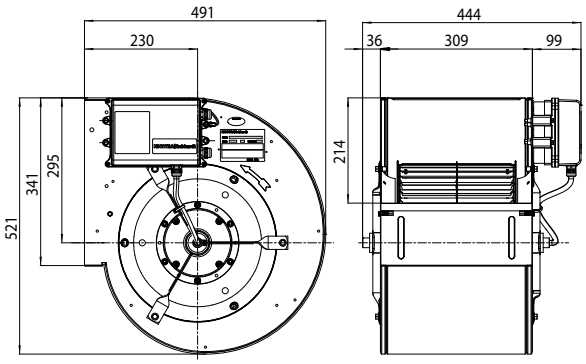

6M04K3 with flange

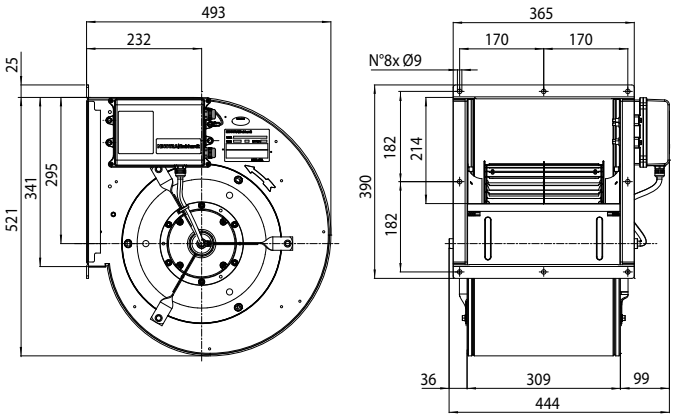

Working point		Sound pressure level for inlet side (Lp) in dB									
	(m³/h)	63	125	250	500	1k	2k	4k	8kHz		LpA
230V / 50Hz	611	69.9	76.8	79.5	71.7	65.9	64.4	61.0	55.0		74.8
10Vdc	2098	70.4	78.5	79.1	70.03	65.8	64.9	60.3	54.0		74.5
	3099	67.9	77.6	80.2	71.2	66.5	63.8	60.4	54.7		75.1
	3674	65.4	77.6	80.0	71.6	69.0	63.5	60.2	54.3		75.5
	3970	61.2	74.0	75.6	68.8	67.2	62.7	59.5	53.5		72.7
	4234	59.3	72.5	73.9	67.0	65.0	62.2	58.8	52.6		71.1
	4454	58.1	73.1	73.3	67.5	66.3	61.6	58.0	51.7		71.3
	4744	58.0	72.1	68.6	66.4	63.4	61.4	57.9	51.5		69.3
	5023	64.0	77.6	66.9	63.9	63.0	61.9	59.0	52.0		69.4
	5239	68.4	66.7	67.0	64.1	62.8	62.8	60.0	52.5		60.0
	5487	74.1	67.0	67.0	64.4	63.0	63.8	61.0	53.2		69.6

DDMP 12/12 - 2kW

Wmax.abs.:	1789	Amp Max:	7.49
Volt:	220/240 1~	Prot.:	IP 44
Hz:	50	T.H.:	YES-IN
Poles:	8	Ins. Cl.:	F

Curves in class 2 according to DIN 24166 q_1=1.15 kg/m³

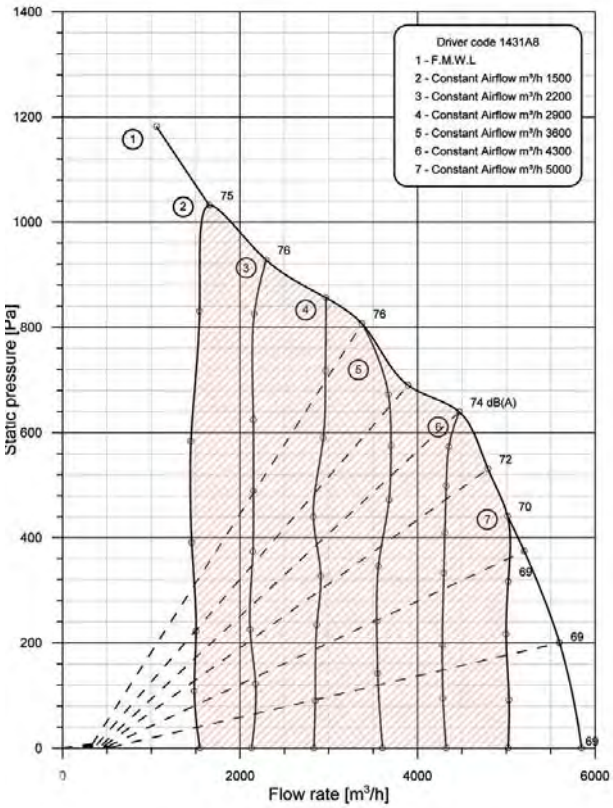

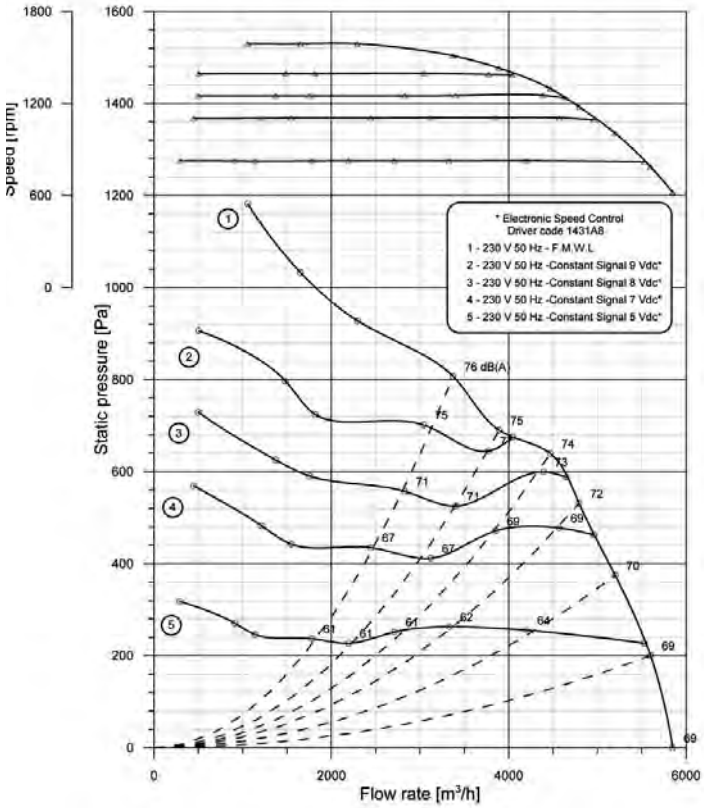

Dimensions in mm, subject to change

fan code 6M04H4

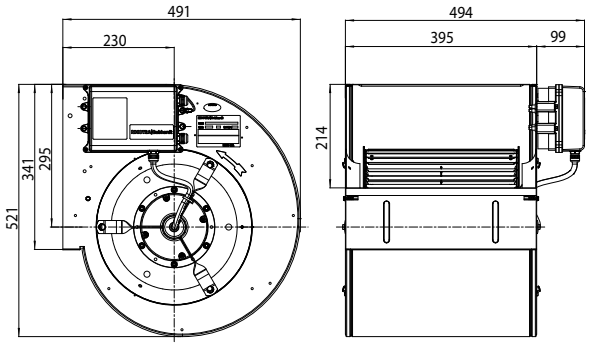

6M04K4 with flange

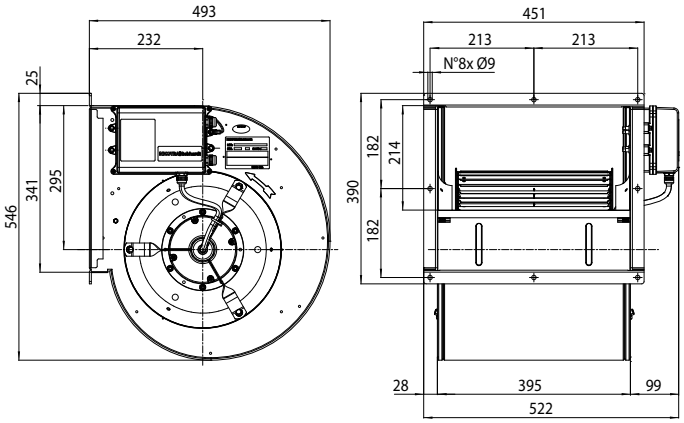

Working point		Sound pressure level for inlet side (Lp) in dB									
	(m³/h)	63	125	250	500	1k	2k	4k	8kHz		LpA
230V / 50Hz	1060	68.5	79.9	81.3	71.6	67.7	66.2	62.6	57.2		76.3
10Vdc	1654	68.8	80.8	79.2	69.5	67.1	65.1	60.9	52.2		74.9
	2259	72.0	81.5	80.6	70.6	68.3	66.9	62.0	55.7		76.1
	3374	70.3	80.6	81.1	71.0	69,7	64.6	60.3	53.9		76.2
	3893	68.7	80.0	79.4	70.3	68.2	63.2	59.2	52.9		74.9
	4471	61.2	77.5	78.4	69.9	68.6	61.5	57.8	51.7		74.2
	4794	59.9	74.3	75.4	67.4	66.2	60.6	56.9	50.5		71.7
	5202	65.4	71.4	74.2	64.5	63.7	59.6	56.1	49.5		69.8
	5600	67.7	70.2	72.2	64.7	61.3	60.4	57.0	50.6		68.8
	5848	70.7	73.2	71.3	63.4	61.8	62.2	58.8	51.9		69.2