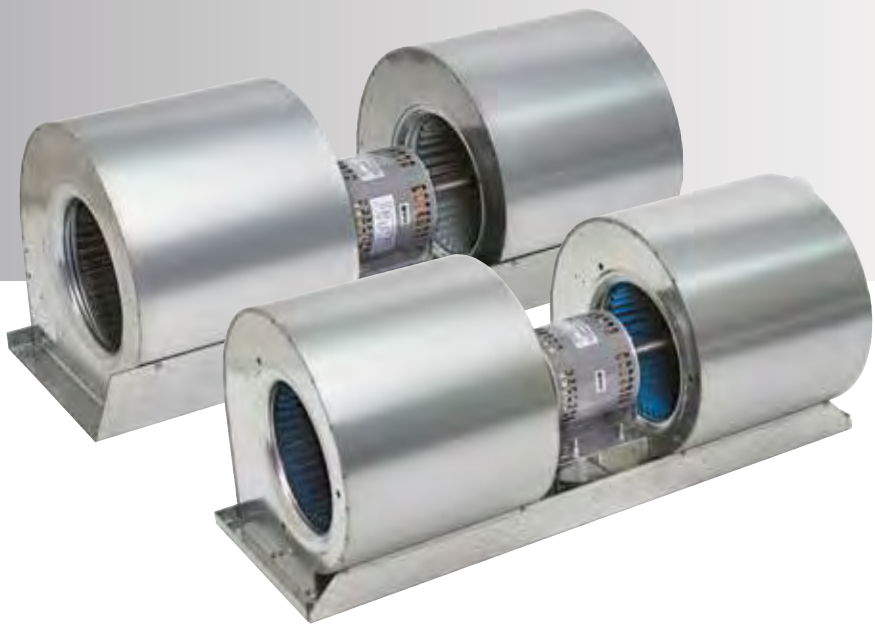

FAN DECKS

DXC SERIES - STEEL WHEEL
DXG SERIES - PLASTIC WHEEL

INTRODUCTION

DESCRIPTION

This type of fan is a direct drive fan deck, referring to the use of twin forward curved fan blowers mounted onto a base tray. The fan features a centrally mounted double shaft motor, directly coupled to the forward curved wheels inside the blower housings.

The direct drive fan decks wheels can be made from 2 different materials, high temp plastic or metal.

A range of motors are available ranging from 180W through to 1500W, achieving airflow performance of up to 2200 l/s.

All motors are fitted with thermal overload protection and insulation that conforms to Class B. F Class motors can be fitted upon request.

All performance data featured in this catalogue have been carried out on an air flow chamber conforming to design requirements stated in BS848.

All tests are carried out in non-ducted or type A insulation.

PART NUMBER IDENTIFICATION

When placing an order the blower product code should be specified. The product code of the blower is composed in accordance with the following example:

D	X	G	2 0 3	T	2 0 3	-	4 0 1
1	2	3	4 - 6	7	8 - 10		11-13

POSITION 1

Type of drive

D = Direct

POSITION 2

Configuration

X = Twin housings double inlet

POSITION 3

Wheel type

A = Louvre strip (R)

C = Steel

G = Plastic

POSITIONS 4 TO 6

Wheel diameter

In millimeters

POSITION 7

Housing

DASH = Standard housing

T = Tight housing

POSITIONS 8 TO 10

Wheel width

In millimeters

POSITIONS 11 TO 13

Final code

ODD NUMBERS = Mechanical build variance

Code examples: DXC241-241-541
DXG203T203-404

FAN DECKS
203MM DIAMETER • 203MM WIDTH

HOUSING
G2 Galvabond®* Steel Z275

MOTOR
240 volts, 50 Hz
4 Pole
3 Speed
Ball Bearings
Class B Insulation
Automatic Thermal Overload Protection

WHEEL
Polypropylene

Unit Weight (kg)	15.5
Motor Part #	8061S109-04
Phase / Type	1ph CSR
Watts Output	425
Venting	Fully
Main Lead	1300
Connectors	B and E on earth
Capacitor Size	10 MFD
Capacitor Lead	1300
Connectors	F

B: Bootlace
E: Eyelet
F: Flag Terminals with Insulators

DIMENSIONS

	A	B	C	D	E	F	G	H	I	J	K	L	M
DXG203T203-401	813	308	161	175	250	210	762	257	267	25	127	178	303

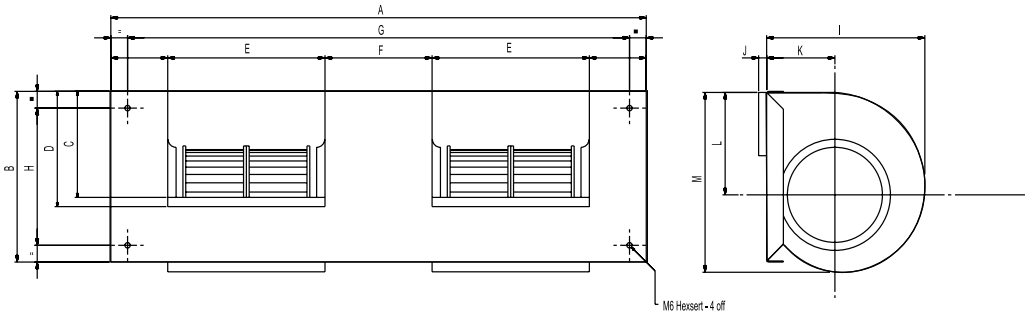

PERFORMANCE GRAPH

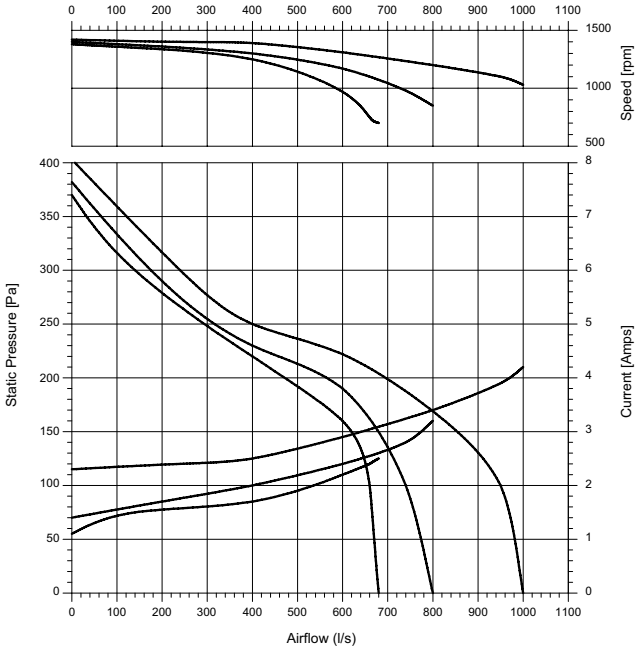
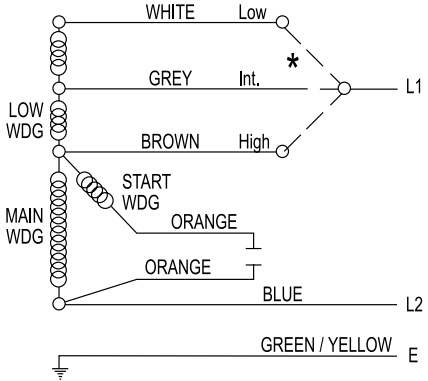
WIRING DIAGRAM